Cambridge Assessment International Education

Cambridge International AS & A Level

CANDIDATE NAME	
CENTRE NUMBER	
CANDIDATE NUMBER	

5345864104

MATHEMATICS **9709/41**

Paper 4 Mechanics **May/June 2023**

1 hour 15 minutes

You must answer on the question paper.

You will need: List of formulae (MF19)

Cambridge Math & Physics
kambridgemp.com

INSTRUCTIONS

- Answer **all** questions.
- Use a black or dark blue pen. You may use an HB pencil for any diagrams or graphs.
- Write your name, centre number and candidate number in the boxes at the top of the page.
- Write your answer to each question in the space provided.
- Do **not** use an erasable pen or correction fluid.
- Do **not** write on any bar codes.
- If additional space is needed, you should use the lined page at the end of this booklet; the question number or numbers must be clearly shown.
- You should use a calculator where appropriate.
- You must show all necessary working clearly; no marks will be given for unsupported answers from a calculator.
- Give non-exact numerical answers correct to 3 significant figures, or 1 decimal place for angles in degrees, unless a different level of accuracy is specified in the question.
- Where a numerical value for the acceleration due to gravity (g) is needed, use $10\,\text{m}\,\text{s}^{-2}$.

INFORMATION

- The total mark for this paper is 50.
- The number of marks for each question or part question is shown in brackets [ ].

This document has **16** pages. Any blank pages are indicated.

© UCLES 2023

BLANK PAGE

Kambridge Math & Physics
kambridgemp.com

1 Two particles P and Q, of masses m kg and 0.3 kg respectively, are at rest on a smooth horizontal plane. P is projected at a speed of $5\,\text{m}\,\text{s}^{-1}$ directly towards Q. After P and Q collide, P moves with a speed of $2\,\text{m}\,\text{s}^{-1}$ in the same direction as it was originally moving.

(a) Find, in terms of m, the speed of Q after the collision. [2]

.....

.....

.....

.....

.....

.....

.....

.....

.....

.....

After this collision, Q moves directly towards a third particle R, of mass 0.6 kg, which is at rest on the plane. Q is brought to rest in the collision with R, and R begins to move with a speed of $1.5\,\text{m}\,\text{s}^{-1}$.

(b) Find the value of m. [2]

.....

.....

.....

.....

.....

.....

.....

.....

.....

.....

Kambridge Math & Physics
kambridgemp.com

2 A particle P of mass 0.4 kg is projected vertically upwards from horizontal ground with speed $10\,\text{m}\,\text{s}^{-1}$.

(a) Find the greatest height above the ground reached by P. [2]

When P reaches the ground again, it bounces vertically upwards. At the first instant that it hits the ground, P loses 7.2 J of energy.

(b) Find the time between the first and second instants at which P hits the ground. [4]

Kambridge Math & Physics
kambridgemp.com

3 A particle moves in a straight line starting from rest. The displacement s m of the particle from a fixed point O on the line at time t s is given by

$$s = t^{\frac{5}{2}} - \frac{15}{4}t^{\frac{3}{2}} + 6.$$

Find the value of s when the particle is again at rest. [4]

Kambridge Math & Physics
kambridgemp.com

4

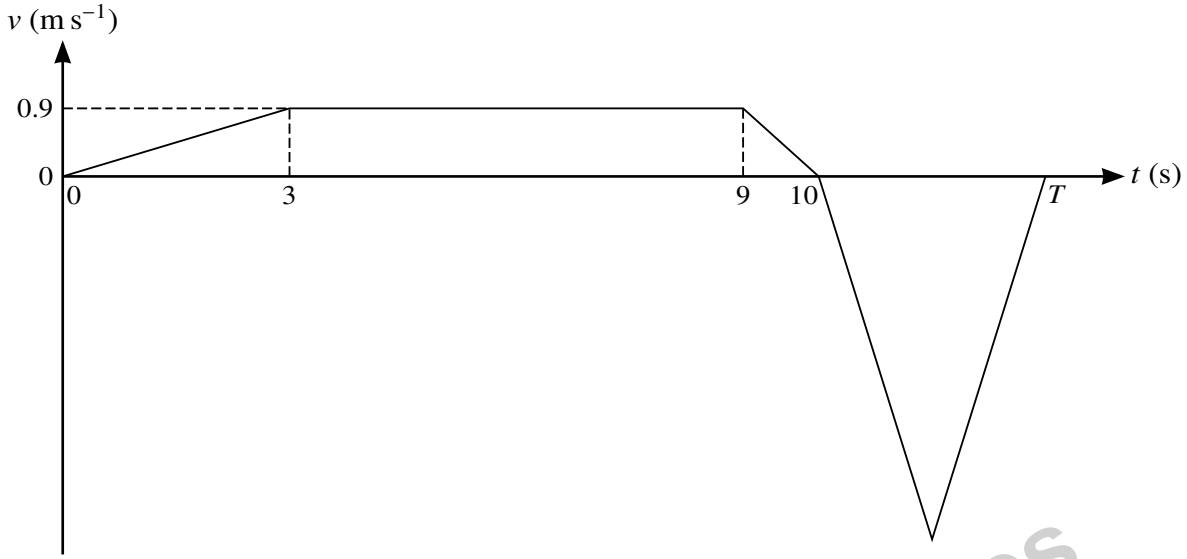

The velocity of a particle at time t s after leaving a fixed point O is v m s^{-1}. The diagram shows a velocity-time graph which models the motion of the particle. The graph consists of 5 straight line segments. The particle accelerates to a speed of 0.9 m s^{-1} in a period of 3 s, then travels at constant speed for 6 s, and then comes instantaneously to rest 1 s later. The particle then moves back and returns to rest at O at time T s.

(a) Find the distance travelled by the particle in the first 10 s of its motion. [2]

.....

.....

.....

.....

.....

.....

.....

.....

.....

.....

.....

.....

.....

Kambridge Math & Physics
kambridgemp.com

(b) Given that $T = 12$, find the minimum velocity of the particle. [2]

.....

.....

.....

.....

.....

.....

.....

.....

.....

(c) Given instead that the greatest speed of the particle is $3\,\text{m s}^{-1}$, find the value of T and hence find the average speed of the particle for the whole of the motion. [4]

.....

.....

.....

.....

.....

.....

.....

.....

.....

.....

.....

.....

.....

.....

Kambridge Math & Physics
kambridgemp.com

5

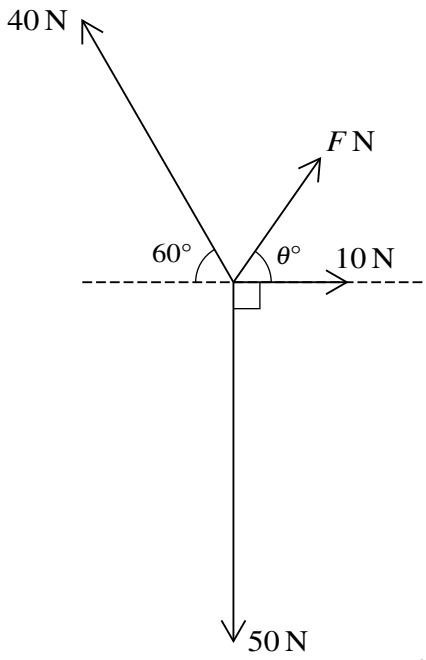

Four coplanar forces act at a point. The magnitudes of the forces are F N, 10 N, 50 N and 40 N. The directions of the forces are as shown in the diagram.

(a) Given that the forces are in equilibrium, find the value of F and the value of θ. [6]

.....

.....

.....

.....

.....

.....

.....

.....

.....

.....

.....

.....

.....

.....

Kambridge Math & Physics
kambridgemp.com

.....

.....

.....

.....

.....

.....

.....

.....

.....

(b) Given instead that $F = 10\sqrt{2}$ and $\theta = 45$, find the direction and the exact magnitude the resultant force. [3]

.....

.....

.....

.....

.....

.....

.....

.....

.....

.....

.....

.....

.....

.....

Kambridge Math & Physics
kambridgemp.com

6

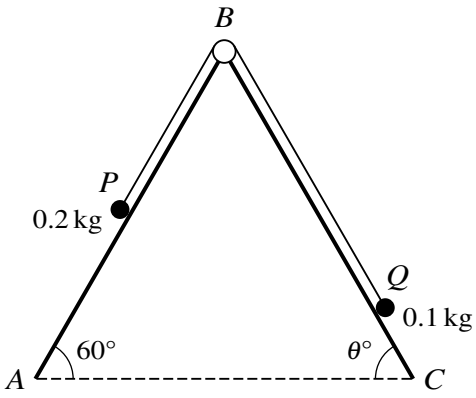

Two particles P and Q, of masses 0.2 kg and 0.1 kg respectively, are attached to the ends of a light inextensible string. The string passes over a fixed smooth pulley at B which is attached to two inclined planes. Particle P lies on a smooth plane AB which is inclined at 60° to the horizontal. Particle Q lies on a plane BC which is inclined at an angle of θ° to the horizontal. The string is taut and the particles can move on lines of greatest slope of the two planes (see diagram).

(a) It is given that $\theta = 60$, the plane BC is rough and the coefficient of friction between Q and the plane BC is 0.7. The particles are released from rest.

Determine whether the particles move. [4]

.....

.....

.....

.....

.....

.....

.....

.....

.....

.....

.....

.....

.....

.....

Kambridge Math & Physics
kambridgemp.com

(b) It is given instead that the plane BC is smooth. The particles are released from rest and in the subsequent motion the tension in the string is $\left(\sqrt{3}-1\right)$ N.

Find the magnitude of the acceleration of P as it moves on the plane, and find the value of θ. [4]

Kambridge Math & Physics
kambridgemp.com

7 A car of mass 1200 kg is travelling along a straight horizontal road. The power of the car's engine is constant and is equal to 16 kW. There is a constant resistance to motion of magnitude 500 N.

(a) Find the acceleration of the car at an instant when its speed is $20\,\text{m}\,\text{s}^{-1}$. [3]

.....

.....

.....

.....

.....

.....

.....

.....

.....

.....

.....

.....

(b) Assuming that the power and the resistance forces remain unchanged, find the steady speed at which the car can travel. [2]

.....

.....

.....

.....

.....

.....

.....

.....

.....

.....

.....

.....

Kambridge Math & Physics
kambridgemp.com

The car comes to the bottom of a straight hill of length 316 m, inclined at an angle to the horizontal of $\sin^{-1}(\frac{1}{60})$. The power remains constant at 16 kW, but the magnitude of the resistance force is no longer constant and changes such that the work done against the resistance force in ascending the hill is 128 400 J. The time taken to ascend the hill is 15 s.

(c) Given that the car is travelling at a speed of $20\,\text{m}\,\text{s}^{-1}$ at the bottom of the hill, find its speed at the top of the hill. [6]

Kambridge Math & Physics
kambridgemp.com

Additional Page

If you use the following lined page to complete the answer(s) to any question(s), the question number(s) must be clearly shown.

Kambridge Math & Physics
kambridgemp.com

BLANK PAGE

Kambridge Math & Physics
kambridgemp.com

BLANK PAGE

Kambridge Math & Physics
kambridgemp.com

Permission to reproduce items where third-party owned material protected by copyright is included has been sought and cleared where possible. Every reasonable effort has been made by the publisher (UCLES) to trace copyright holders, but if any items requiring clearance have unwittingly been included, the publisher will be pleased to make amends at the earliest possible opportunity.

To avoid the issue of disclosure of answer-related information to candidates, all copyright acknowledgements are reproduced online in the Cambridge Assessment International Education Copyright Acknowledgements Booklet. This is produced for each series of examinations and is freely available to download at www.cambridgeinternational.org after the live examination series.

Cambridge Assessment International Education is part of Cambridge Assessment. Cambridge Assessment is the brand name of the University of Cambridge Local Examinations Syndicate (UCLES), which is a department of the University of Cambridge.