* 0000800000001 *

Cambridge Assessment International Education

Cambridge International AS & A Level

CANDIDATE NAME

CENTRE NUMBER

CANDIDATE NUMBER

* 4 9 7 1 6 9 8 3 6 1 *

MATHEMATICS **9709/42**

Paper 4 Mechanics **February/March 2025**

1 hour 15 minutes

You must answer on the question paper.

You will need: List of formulae (MF19)

Kambridge Math & Physics
kambridgemp.com

INSTRUCTIONS

- Answer **all** questions.
- Use a black or dark blue pen. You may use an HB pencil for any diagrams or graphs.
- Write your name, centre number and candidate number in the boxes at the top of the page.
- Write your answer to each question in the space provided.
- Do **not** use an erasable pen or correction fluid.
- Do **not** write on any bar codes.
- If additional space is needed, you should use the lined page at the end of this booklet; the question number or numbers must be clearly shown.
- You should use a calculator where appropriate.
- You must show all necessary working clearly; no marks will be given for unsupported answers from a calculator.
- Give non-exact numerical answers correct to 3 significant figures, or 1 decimal place for angles in degrees, unless a different level of accuracy is specified in the question.
- Where a numerical value for the acceleration due to gravity (g) is needed, use $10\,\text{m}\,\text{s}^{-2}$.

INFORMATION

- The total mark for this paper is 50.
- The number of marks for each question or part question is shown in brackets [ ].

This document has **16** pages. Any blank pages are indicated.

© UCLES 2025

[Turn over

BLANK PAGE

Kambridge Math & Physics
kambridgemp.com

DO NOT WRITE IN THIS MARGIN
DO NOT WRITE IN THIS MARGIN
DO NOT WRITE IN THIS MARGIN
DO NOT WRITE IN THIS MARGIN
DO NOT WRITE IN THIS MARGIN

1

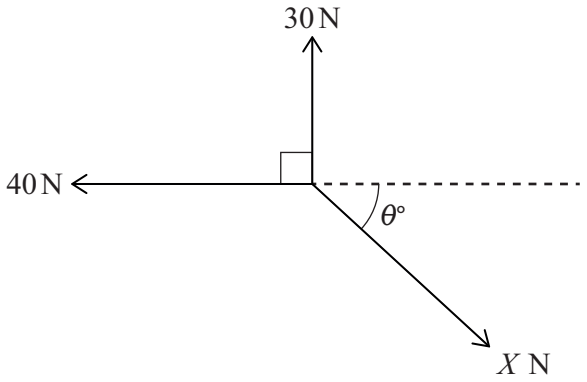

Three coplanar forces of magnitudes 40 N, 30 N and X N act at a point in the directions shown in the diagram.

Given that the forces are in equilibrium, find the values of θ and X. [4]

Kambridge Math & Physics
kambridgemp.com

DO NOT WRITE IN THIS MARGIN
DO NOT WRITE IN THIS MARGIN
DO NOT WRITE IN THIS MARGIN
DO NOT WRITE IN THIS MARGIN
DO NOT WRITE IN THIS MARGIN

2 A cyclist is travelling along a straight horizontal road at a speed of $4\,\text{m s}^{-1}$ when she passes a point O. She accelerates at a constant rate for a distance of 42 m, reaching a speed of $V\,\text{m s}^{-1}$. She maintains the speed of $V\,\text{m s}^{-1}$ for 50 m and then decelerates at $2\,\text{m s}^{-2}$ before coming to rest. The distance travelled while decelerating is 16 m.

(a) Find the value of V. [2]

(b) Find the total time for which she is in motion from the instant that she passes O. [3]

Kambridge Math & Physics
kambridgemp.com

DO NOT WRITE IN THIS MARGIN
DO NOT WRITE IN THIS MARGIN
DO NOT WRITE IN THIS MARGIN
DO NOT WRITE IN THIS MARGIN
DO NOT WRITE IN THIS MARGIN

DO NOT WRITE IN THIS MARGIN
DO NOT WRITE IN THIS MARGIN
DO NOT WRITE IN THIS MARGIN
DO NOT WRITE IN THIS MARGIN
DO NOT WRITE IN THIS MARGIN

3 An aeroplane is flying at a constant speed.

(a) The aeroplane is flying horizontally. The aeroplane's engines are producing a constant power of 5500 kW, and the aeroplane experiences a constant horizontal resistance force of 25 kN.

Find the speed of the aeroplane. [2]

.....

.....

.....

.....

.....

.....

.....

.....

.....

(b) The aeroplane then ascends 300 m in 50 s, while maintaining the same speed. The resistance force is no longer constant, and the work done against the resistance force in ascending the 300 m is 270 000 kJ. The mass of the aeroplane is 60 000 kg.

Find the average power of the aeroplane's engines. [4]

.....

.....

.....

.....

.....

.....

.....

.....

.....

.....

.....

.....

Kambridge Math & Physics
kambridgemp.com

4

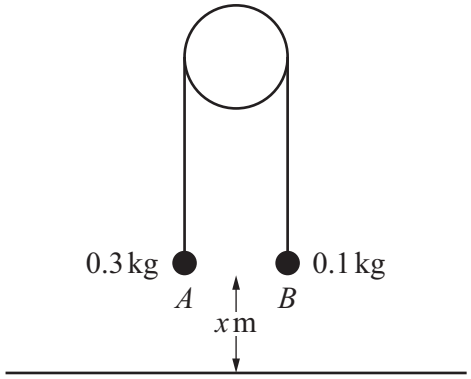

Two particles A and B have masses 0.3 kg and 0.1 kg respectively. The particles are attached to the ends of a light inextensible string. The string passes over a fixed smooth pulley, and the particles hang vertically below the pulley. Both particles are initially at a height of x m above horizontal ground (see diagram). The system is released from rest.

(a) Find the tension in the string and the acceleration of the particles. [4]

.....

.....

.....

.....

.....

.....

.....

.....

.....

.....

.....

.....

.....

.....

.....

.....

.....

.....

Kambridge Math & Physics
kambridgemp.com

DO NOT WRITE IN THIS MARGIN
DO NOT WRITE IN THIS MARGIN
DO NOT WRITE IN THIS MARGIN
DO NOT WRITE IN THIS MARGIN
DO NOT WRITE IN THIS MARGIN

During the subsequent motion, B does **not** reach the pulley. When A reaches the ground, it comes to rest.

(b) Given that the greatest height of B above the ground is 1.2 m, find the value of x. [3]

DO NOT WRITE IN THIS MARGIN
DO NOT WRITE IN THIS MARGIN
DO NOT WRITE IN THIS MARGIN
DO NOT WRITE IN THIS MARGIN
DO NOT WRITE IN THIS MARGIN

Kambridge Math & Physics
kambridgemp.com

5

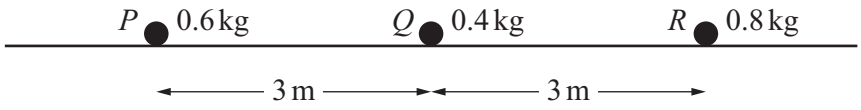

Three particles P, Q and R, of masses 0.6 kg, 0.4 kg and 0.8 kg respectively, are at rest in a straight line on a smooth horizontal plane. The distance from P to Q is 3 m, and the distance from Q to R is also 3 m (see diagram). P is projected directly towards Q with speed $3\,\text{m}\,\text{s}^{-1}$. After P and Q collide, P continues to move in the same direction with speed $1.5\,\text{m}\,\text{s}^{-1}$.

(a) Find the speed of Q after the collision. [2]

.....

.....

.....

.....

.....

.....

.....

.....

.....

.....

.....

Kambridge Math & Physics
kambridgemp.com

In the subsequent collision between Q and R, these particles coalesce.

(b) Find the speed of the combined particle after this collision. [1]

.....

.....

.....

.....

.....

.....

.....

.....

.....

DO NOT WRITE IN THIS MARGIN
DO NOT WRITE IN THIS MARGIN
DO NOT WRITE IN THIS MARGIN
DO NOT WRITE IN THIS MARGIN
DO NOT WRITE IN THIS MARGIN

(c) Find the time that it takes from when P is initially projected until the instant at which P collides with the combined particle. [4]

DO NOT WRITE IN THIS MARGIN
DO NOT WRITE IN THIS MARGIN
DO NOT WRITE IN THIS MARGIN
DO NOT WRITE IN THIS MARGIN
DO NOT WRITE IN THIS MARGIN

Kambridge Math & Physics
kambridgemp.com

6

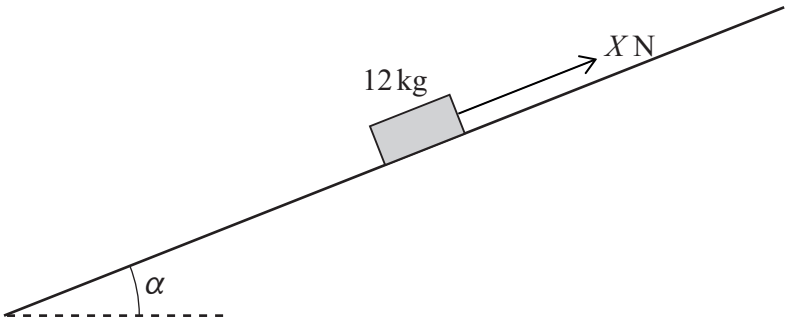

A block of mass 12 kg is placed on a rough plane inclined at an angle of α to the horizontal, where $\alpha = \tan^{-1}0.5$. A force of X N is applied to the block, directly up the plane (see diagram). The coefficient of friction between the block and the plane is μ.

(a) It is given that $\mu = 0.15$ and $X = 20$.

Find the time that it takes for the block to move 2 m down the plane from rest. [6]

Kambridge Math & Physics
kambridgemp.com

DO NOT WRITE IN THIS MARGIN
DO NOT WRITE IN THIS MARGIN
DO NOT WRITE IN THIS MARGIN
DO NOT WRITE IN THIS MARGIN
DO NOT WRITE IN THIS MARGIN

(b) It is given instead that $\mu \neq 0.15$ and that when $X = 10$, the block is on the point of moving **down** the plane.

Find the value of μ and the value of X for which the block is on the point of moving **up** the plane. [4]

DO NOT WRITE IN THIS MARGIN
DO NOT WRITE IN THIS MARGIN
DO NOT WRITE IN THIS MARGIN
DO NOT WRITE IN THIS MARGIN
DO NOT WRITE IN THIS MARGIN

Kambridge Math & Physics
kambridgemp.com

7 A particle moves in a straight line. The velocity $v\,\text{m}\,\text{s}^{-1}$ of the particle $t\,\text{s}$ after leaving a fixed point O is given by $v = k(20 + pt - 6t^2)$, where k and p are constants. The acceleration of the particle at $t = 1$ is $42\,\text{m}\,\text{s}^{-2}$, and the displacement of the particle from O at $t = 1$ is 93 m.

(a) Show that $k = 3$ and $p = 26$. [6]

Kambridge Math & Physics
kambridgemp.com

DO NOT WRITE IN THIS MARGIN
DO NOT WRITE IN THIS MARGIN
DO NOT WRITE IN THIS MARGIN
DO NOT WRITE IN THIS MARGIN
DO NOT WRITE IN THIS MARGIN

(b) Find the distance moved by the particle between the time at which its acceleration is zero and the time at which its velocity is zero. [5]

DO NOT WRITE IN THIS MARGIN
DO NOT WRITE IN THIS MARGIN
DO NOT WRITE IN THIS MARGIN
DO NOT WRITE IN THIS MARGIN
DO NOT WRITE IN THIS MARGIN

Kambridge Math & Physics
kambridgemp.com

Additional page

If you use the following page to complete the answer to any question, the question number must be clearly shown.

Kambridge Math & Physics
kambridgemp.com

DO NOT WRITE IN THIS MARGIN
DO NOT WRITE IN THIS MARGIN
DO NOT WRITE IN THIS MARGIN
DO NOT WRITE IN THIS MARGIN
DO NOT WRITE IN THIS MARGIN

BLANK PAGE

DO NOT WRITE IN THIS MARGIN
DO NOT WRITE IN THIS MARGIN
DO NOT WRITE IN THIS MARGIN
DO NOT WRITE IN THIS MARGIN
DO NOT WRITE IN THIS MARGIN

Kambridge Math & Physics
kambridgemp.com

BLANK PAGE

Kambridge Math & Physics
kambridgemp.com

DO NOT WRITE IN THIS MARGIN
DO NOT WRITE IN THIS MARGIN
DO NOT WRITE IN THIS MARGIN
DO NOT WRITE IN THIS MARGIN
DO NOT WRITE IN THIS MARGIN

Permission to reproduce items where third-party owned material protected by copyright is included has been sought and cleared where possible. Every reasonable effort has been made by the publisher (UCLES) to trace copyright holders, but if any items requiring clearance have unwittingly been included, the publisher will be pleased to make amends at the earliest possible opportunity.

To avoid the issue of disclosure of answer-related information to candidates, all copyright acknowledgements are reproduced online in the Cambridge Assessment International Education Copyright Acknowledgements Booklet. This is produced for each series of examinations and is freely available to download at www.cambridgeinternational.org after the live examination series.

Cambridge Assessment International Education is part of Cambridge Assessment. Cambridge Assessment is the brand name of the University of Cambridge Local Examinations Syndicate (UCLES), which is a department of the University of Cambridge.