Cambridge International AS & A Level

Cambridge International Examinations
Cambridge International Advanced Subsidiary and Advanced Level

CANDIDATE NAME

CENTRE NUMBER | | | | | |

CANDIDATE NUMBER | | | | |

9669337925 3

PHYSICS **9702/42**

Paper 4 A Level Structured Questions **October/November 2018**

2 hours

Candidates answer on the Question Paper.

No Additional Materials are required.

READ THESE INSTRUCTIONS FIRST

Write your Centre number, candidate number and name on all the work you hand in.
Write in dark blue or black pen.
You may use an HB pencil for any diagrams or graphs.
Do not use staples, paper clips, glue or correction fluid.
DO **NOT** WRITE IN ANY BARCODES.

Answer **all** questions.

Electronic calculators may be used.
You may lose marks if you do not show your working or if you do not use appropriate units.

At the end of the examination, fasten all your work securely together.
The number of marks is given in brackets [ ] at the end of each question or part question.

Kambridge Math & Physics
kambridgemp.com

This document consists of **27** printed pages and **1** blank page.

© UCLES 2018

CAMBRIDGE International Examinations

Data

speed of light in free space	$c = 3.00 \times 10^{8}\,\text{m s}^{-1}$
permeability of free space	$\mu_0 = 4\pi \times 10^{-7}\,\text{H m}^{-1}$
permittivity of free space	$\varepsilon_0 = 8.85 \times 10^{-12}\,\text{F m}^{-1}$
	$(\frac{1}{4\pi\varepsilon_0} = 8.99 \times 10^{9}\,\text{m F}^{-1})$
elementary charge	$e = 1.60 \times 10^{-19}\,\text{C}$
the Planck constant	$h = 6.63 \times 10^{-34}\,\text{J s}$
unified atomic mass unit	$1\,\text{u} = 1.66 \times 10^{-27}\,\text{kg}$
rest mass of electron	$m_e = 9.11 \times 10^{-31}\,\text{kg}$
rest mass of proton	$m_p = 1.67 \times 10^{-27}\,\text{kg}$
molar gas constant	$R = 8.31\,\text{J K}^{-1}\,\text{mol}^{-1}$
the Avogadro constant	$N_A = 6.02 \times 10^{23}\,\text{mol}^{-1}$
the Boltzmann constant	$k = 1.38 \times 10^{-23}\,\text{J K}^{-1}$
gravitational constant	$G = 6.67 \times 10^{-11}\,\text{N m}^2\,\text{kg}^{-2}$
acceleration of free fall	$g = 9.81\,\text{m s}^{-2}$

Kambridge Math & Physics
kambridgemp.com

Formulae

uniformly accelerated motion	$s = ut + \frac{1}{2}at^2$ $v^2 = u^2 + 2as$
work done on/by a gas	$W = p\Delta V$
gravitational potential	$\phi = -\frac{Gm}{r}$
hydrostatic pressure	$p = \rho gh$
pressure of an ideal gas	$p = \frac{1}{3}\frac{Nm}{V}\langle c^2 \rangle$
simple harmonic motion	$a = -\omega^2 x$
velocity of particle in s.h.m.	$v = v_0 \cos \omega t$ $v = \pm \omega \sqrt{(x_0^2 - x^2)}$
Doppler effect	$f_o = \frac{f_s v}{v \pm v_s}$
electric potential	$V = \frac{Q}{4\pi\varepsilon_0 r}$
capacitors in series	$1/C = 1/C_1 + 1/C_2 + \ldots$
capacitors in parallel	$C = C_1 + C_2 + \ldots$
energy of charged capacitor	$W = \frac{1}{2}QV$
electric current	$I = Anvq$
resistors in series	$R = R_1 + R_2 + \ldots$
resistors in parallel	$1/R = 1/R_1 + 1/R_2 + \ldots$
Hall voltage	$V_H = \frac{BI}{ntq}$
alternating current/voltage	$x = x_0 \sin \omega t$
radioactive decay	$x = x_0 \exp(-\lambda t)$
decay constant	$\lambda = \frac{0.693}{t_{\frac{1}{2}}}$

Kambridge Math & Physics
kambridgemp.com

Answer **all** the questions in the spaces provided.

1 **(a)** **(i)** State what is meant by *gravitational field strength*.

.....

.....

.....[1]

(ii) Explain why, at the surface of a planet, gravitational field strength is numerically equal to the acceleration of free fall.

.....

.....

.....[1]

(b) An isolated uniform spherical planet has radius R.
The acceleration of free fall at the surface of the planet is g.

On Fig. 1.1, sketch a graph to show the variation of the acceleration of free fall with distance x from the centre of the planet for values of x in the range $x = R$ to $x = 4R$.

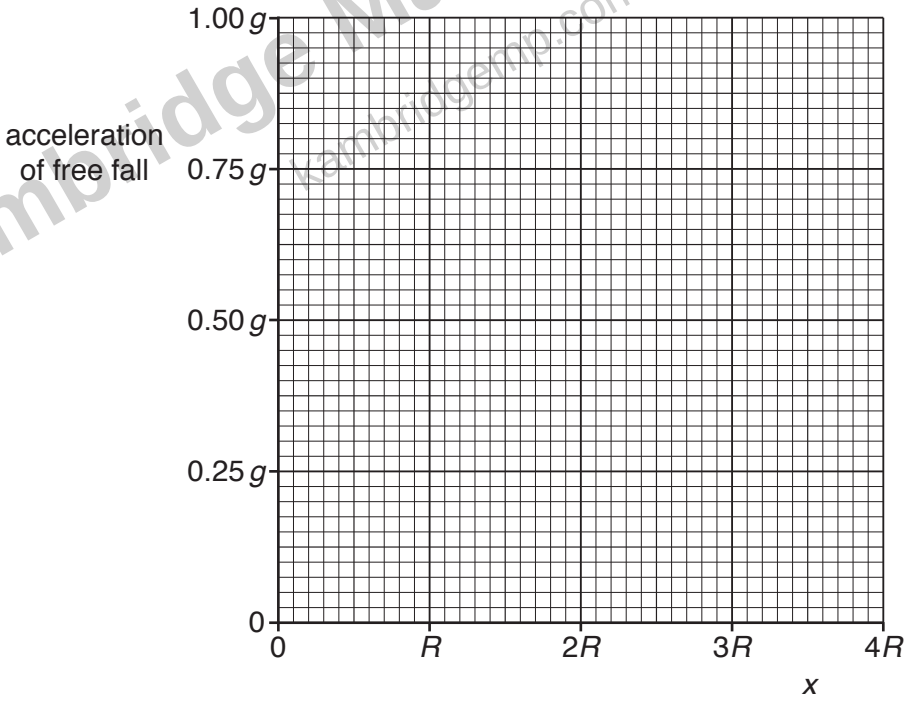

Fig. 1.1

[3]

Kambridge Math & Physics
kambridgemp.com

(c) The planet in **(b)** has radius R equal to 3.4×10^3 km and mean density 4.0×10^3 kg m^{-3}.

Calculate the acceleration of free fall at a height R above its surface.

acceleration of free fall = ... m s^{-2} [3]

[Total: 8]

Kambridge Math & Physics
kambridgemp.com

2 **(a)** State what is meant by an *ideal gas*.

.....

.....

.....[2]

(b) An ideal gas comprised of single atoms is contained in a cylinder and has a volume of $1.84 \times 10^{-2}\,m^3$ at a pressure of $2.12 \times 10^{7}\,Pa$.
The mass of gas in the cylinder is 3.20 kg.

(i) Determine, to three significant figures, the root-mean-square (r.m.s.) speed of the atoms of the gas.

r.m.s. speed = ...$m\,s^{-1}$ [3]

Kambridge Math & Physics
kambridgemp.com

(ii) The temperature of the gas in the cylinder is 22 °C.

Determine, to three significant figures,

1. the amount, in mol, of the gas,

amount = ... mol [2]

2. the mass of one atom of the gas.

mass = ... kg [2]

(c) Use your answer in **(b)(ii) part 2** to determine the nucleon number A of an atom of the gas.

A = ... [1]

[Total: 10]

Kambridge Math & Physics
kambridgemp.com

3 **(a)** Define *specific latent heat of fusion*.

.....

.....

.....[2]

(b) A student sets up the apparatus shown in Fig. 3.1 in order to investigate the melting of ice.

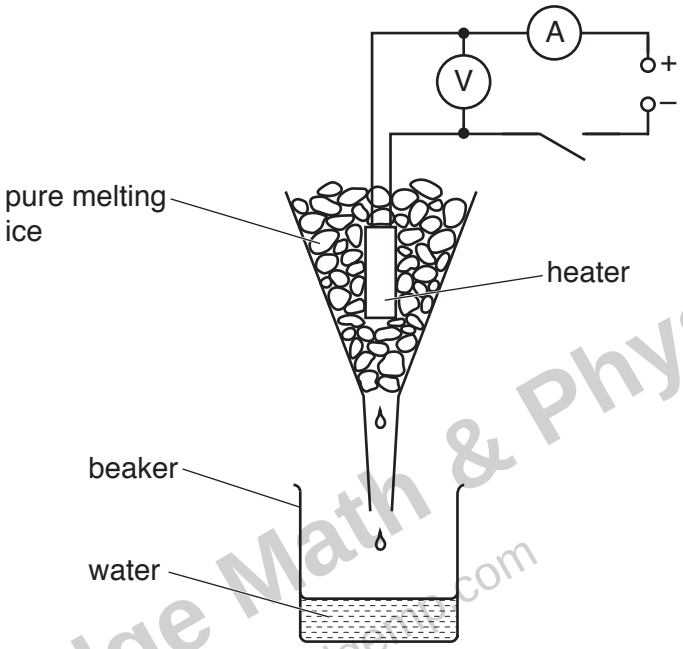

Fig. 3.1

The heater is switched on.
When the pure ice is melting at a constant rate, the data shown in Fig. 3.2 are collected.

voltmeter reading /V	ammeter reading /A	initial mass of beaker plus water/g	final mass of beaker plus water/g	time of collection /minutes
12.8	4.60	121.5	185.0	5.00

Fig. 3.2

The specific latent heat of fusion of ice is $332\,J\,g^{-1}$.

(i) State what is observed by the student that shows that the ice is melting at a constant rate.

.....

.....[1]

Cambridge Math & Physics
kambridgemath.com

(ii) Use the data in Fig. 3.2 to determine the rate at which

1. thermal energy is transferred to the melting ice,

rate = ... W

2. thermal energy is gained from the surroundings.

rate = ... W
[4]

[Total: 7]

Kambridge Math & Physics
kambridgemp.com

4 A U-tube contains liquid, as shown in Fig. 4.1.

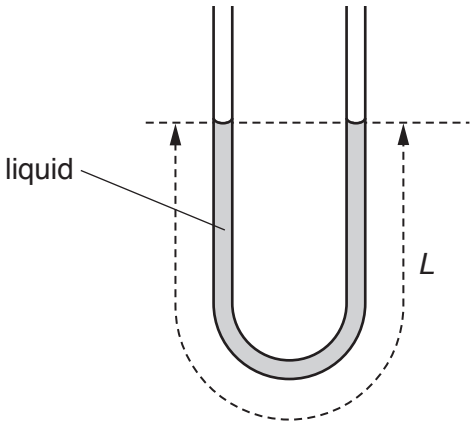

Fig. 4.1

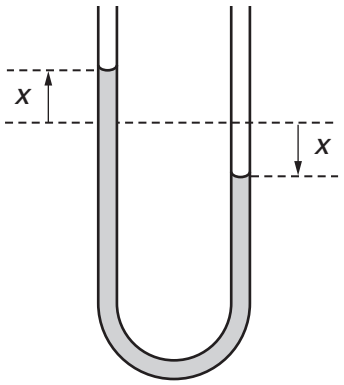

Fig. 4.2

The total length of the liquid column is L.

The column of liquid is displaced so that the change in height of the liquid level from the equilibrium position in each arm of the U-tube is x, as shown in Fig. 4.2.

The liquid in the U-tube then oscillates such that its acceleration a is given by the expression

$$a = -\left(\frac{2g}{L}\right)x$$

where g is the acceleration of free fall.

(a) Show that the liquid column undergoes simple harmonic motion.

[2]

Kambridge Math & Physics
kambridgemp.com

(b) The variation with time t of the displacement x is shown in Fig. 4.3.

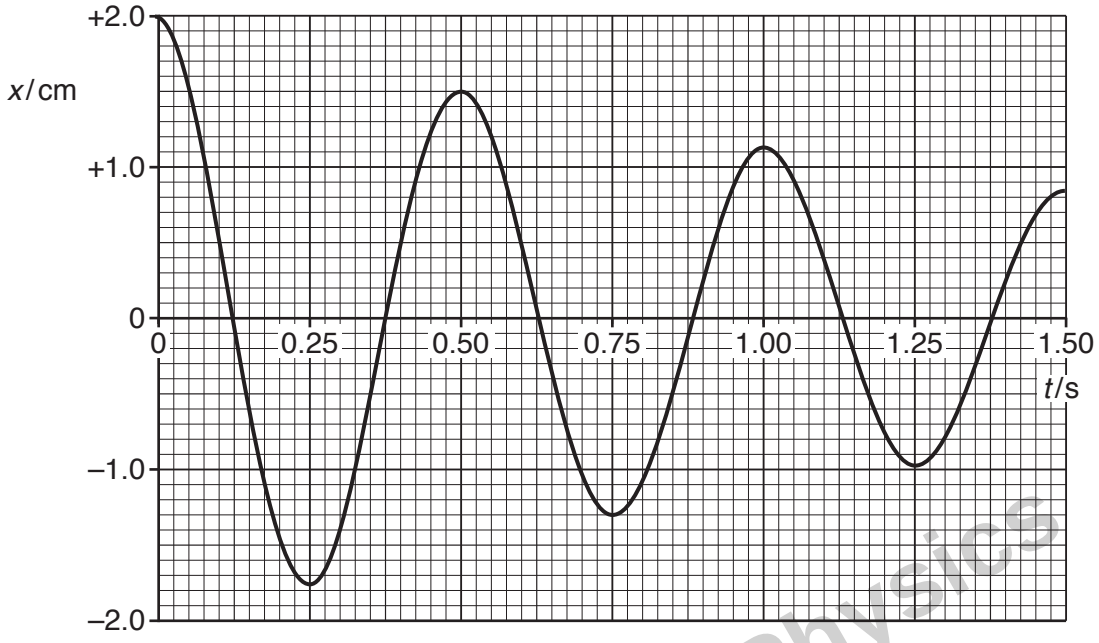

Fig. 4.3

Use data from Fig. 4.3 to determine the length L of the liquid column.

Kambridge Math & Physics
kambridgemp.com

L = ... m [3]

(c) The oscillations shown in Fig. 4.3 are damped.

(i) Suggest one cause of this damping.

.....

.....[1]

(ii) Calculate the ratio

$$\frac{\text{total energy of oscillations after 1.5 complete oscillations}}{\text{total initial energy of oscillations}}$$

ratio = ... [2]

[Total: 8]

Kambridge Math & Physics
kambridgemp.com

BLANK PAGE

Kambridge Math & Physics
kambridgemp.com

5 **(a)** In radio communication, the radio wave is usually modulated.

State what is meant by *amplitude modulation* (*AM*).

.....

.....

.....[2]

(b) A sinusoidal radio carrier wave has a frequency of 900 kHz and an unmodulated amplitude measured to be 4.0 V.

The carrier wave is amplitude modulated by a signal of frequency 5.0 kHz.

For the amplitude modulated wave,

(i) determine the wavelength,

wavelength = ... m [1]

(ii) describe the amplitude variation,

.....

.....

.....[2]

(iii) state the bandwidth.

bandwidth = ... Hz [1]

(c) Communication is sometimes made using satellites in geostationary orbits that have a period of rotation about the Earth of 24 hours.

(i) State two other features, apart from the period, of a geostationary orbit.

1. .....

.....

2. .....

.....

[2]

Kambridge Math & Physics
kambridgemp.com

(ii) Suggest why

1. frequencies of the order of gigahertz are used for satellite communication,

.....

.....[1]

2. the uplink frequency to the satellite is different from the downlink frequency.

.....

.....

.....[2]

[Total: 11]

Kambridge Math & Physics
kambridgemp.com

6 **(a)** State

(i) what is meant by the *electric potential* at a point,

.....

.....

.....[2]

(ii) the relationship between electric potential at a point and electric field strength at the point.

.....

.....

.....[2]

(b) Two similar solid metal spheres A and B, each of radius *R*, are situated in a vacuum such that the separation of their centres is *D*, as shown in Fig. 6.1.

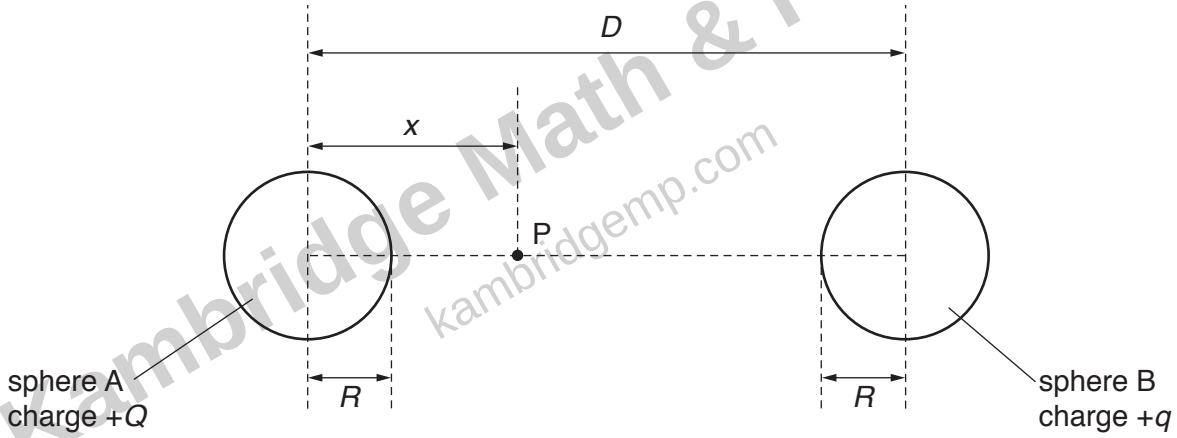

Fig. 6.1

The charge +*Q* on sphere A is larger than the charge +*q* on sphere B.

A movable point P is located on the line joining the centres of the two spheres.
The point P is a distance *x* from the centre of sphere A.

Kambridge Math & Physics
kambridgemp.com

On Fig. 6.2, sketch a graph to show the variation with x of the electric potential V between the centres of the two spheres.

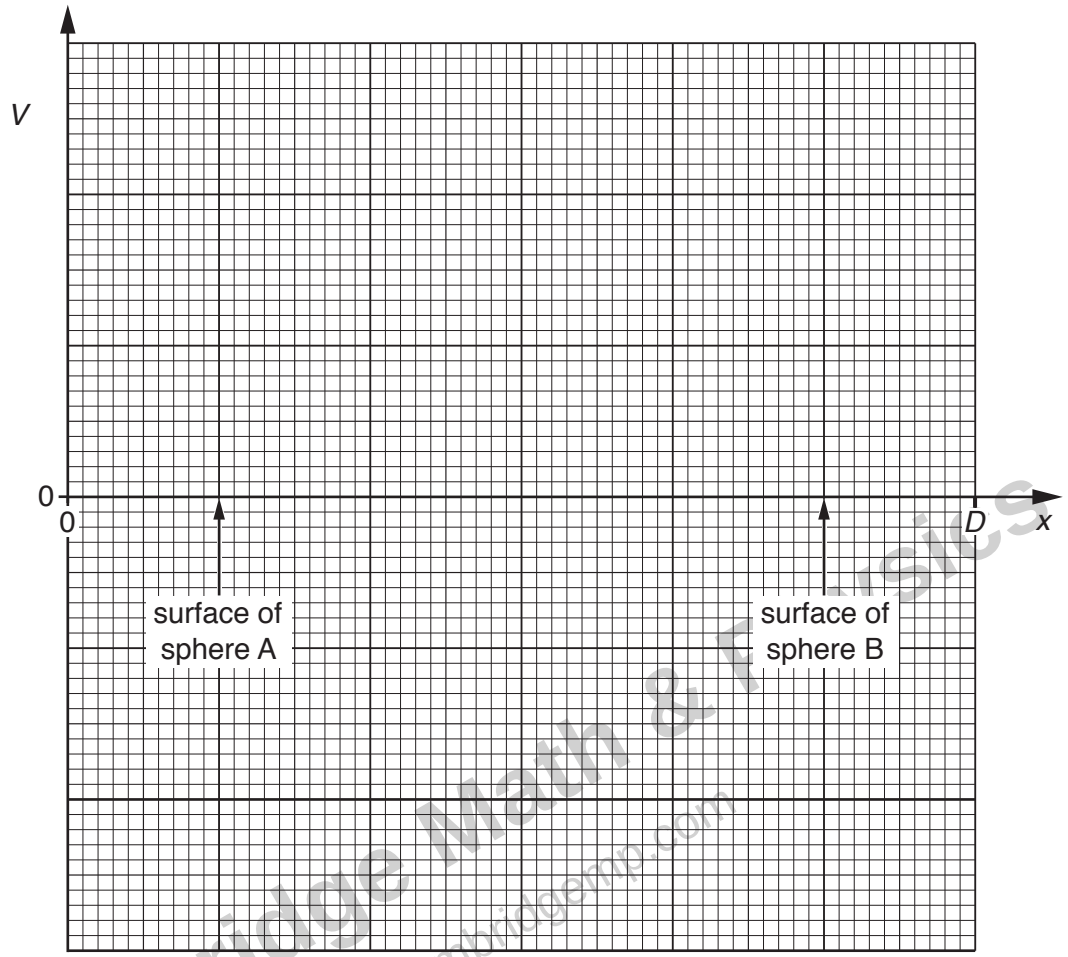

Fig. 6.2

[4]

[Total: 8]

Kambridge Math & Physics
kambridgemp.com

7 A circuit incorporating an ideal operational amplifier (op-amp) is shown in Fig. 7.1.

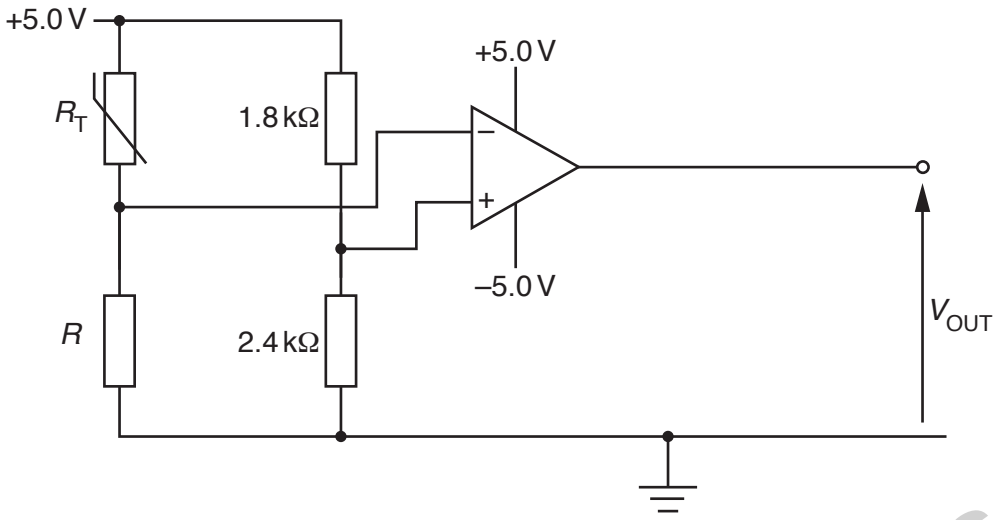

Fig. 7.1

The variation with temperature θ of the resistance R_T of the thermistor is shown in Fig. 7.2.

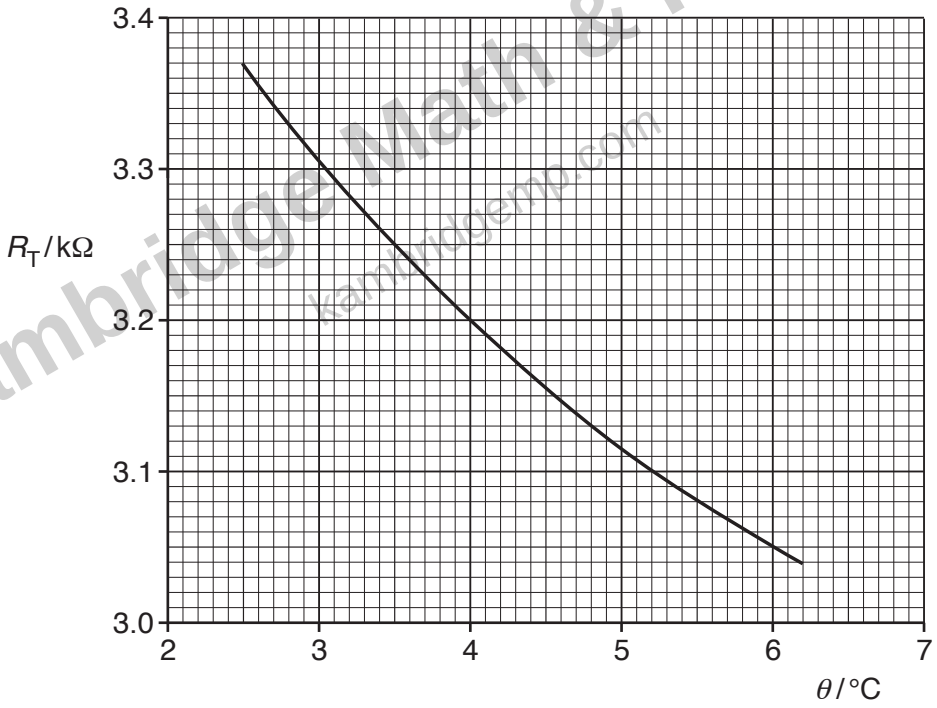

Fig. 7.2

Kambridge Math & Physics
kambridgemp.com

(a) The output potential V_{OUT} of the op-amp circuit changes sign when the temperature of the thermistor is 4.0 °C.
Calculate the resistance R.

R = ... kΩ [2]

(b) State and explain whether the output potential V_{OUT} is +5.0 V or –5.0 V for a thermistor temperature of 2.5 °C.

.....

.....

.....

.....[3]

(c) The output of the op-amp is to be displayed using two light-emitting diodes (LEDs) labelled G and B.
When the temperature of the thermistor is below 4.0 °C, only the LED labelled G emits light.
The LED labelled B emits light only when the temperature of the thermistor is above 4.0 °C.

On Fig. 7.1, draw and label the symbols for the two LEDs. [3]

[Total: 8]

Kambridge Math & Physics
kambridgemp.com

8 **(a)** Define *magnetic flux density*.

.....

.....

.....

.....[3]

(b) A stiff copper wire is balanced horizontally on a pivot, as shown in Fig. 8.1.

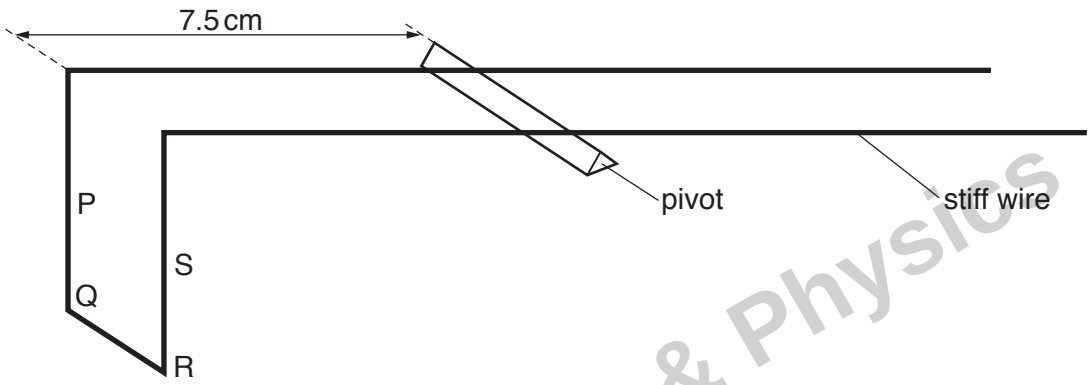

Fig. 8.1

Sections PQ, QR and RS of the wire are situated in a uniform magnetic field of flux density *B* produced between the poles of a permanent magnet.
The perpendicular distance of PQRS from the pivot is 7.5 cm.

When a current of 2.7 A is passed through the wire, a small mass of 45 mg is placed a distance 8.8 cm from the pivot in order to restore the balance of the wire, as shown in Fig. 8.2.

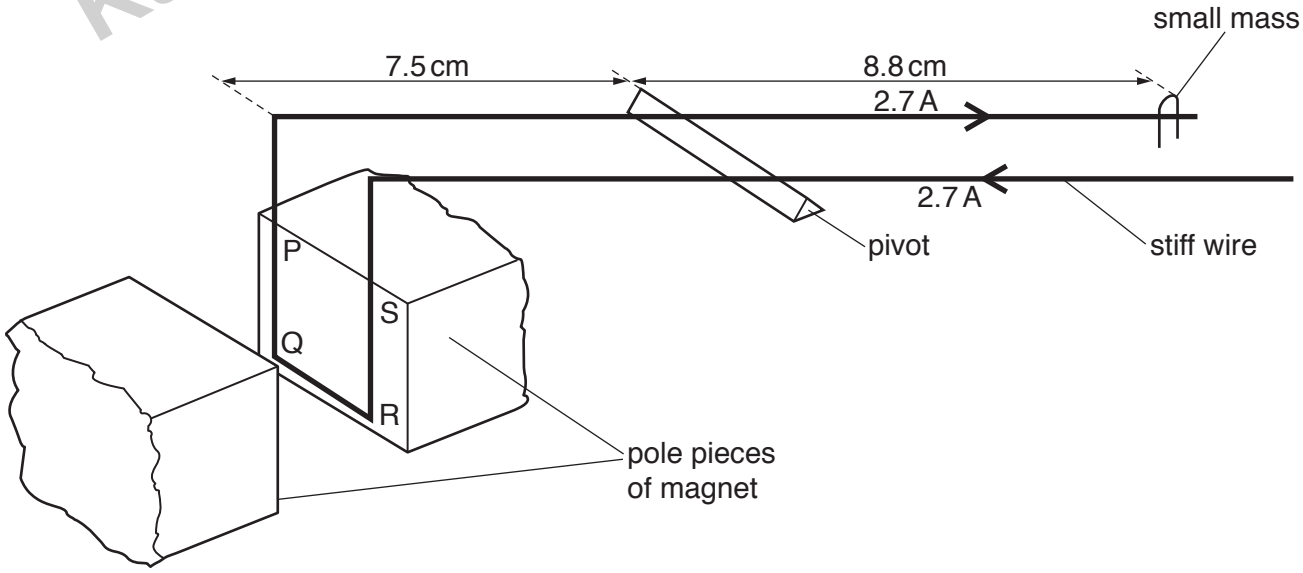

Fig. 8.2

Kambridge Math & Physics
kambridgemp.com

(i) Explain why, when the current is switched on, the current in the sections PQ and RS of the wire does not affect the balance of the wire.

.....

.....

.....[2]

(ii) The length of section QR of the wire is 1.2 cm.
Calculate the magnetic flux density *B*.

B = ... T [3]

[Total: 8]

Kambridge Math & Physics
kambridgemp.com

9 **(a)** A Hall probe is placed near one end of a solenoid that has been wound on a soft-iron core, as shown in Fig. 9.1.

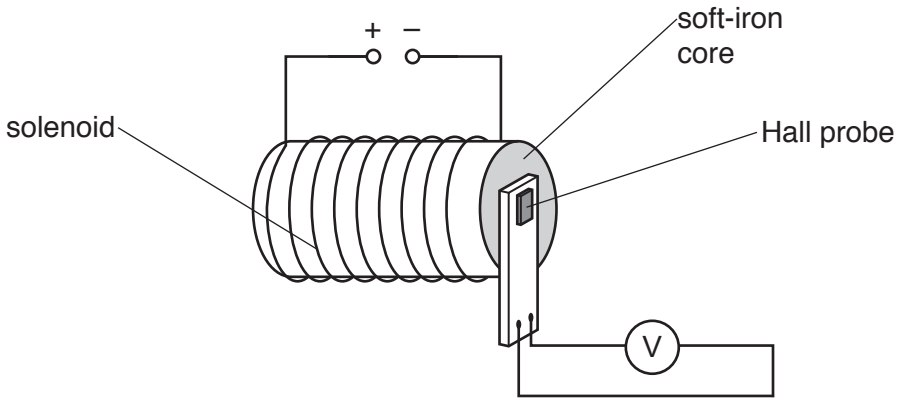

Fig. 9.1

The current in the solenoid is switched on.
The Hall probe is rotated until the reading V_H on the voltmeter is maximum.

The current in the solenoid is then varied, causing the magnetic flux density to change.
The variation with time t of the magnetic flux density B at the Hall probe is shown in Fig. 9.2.

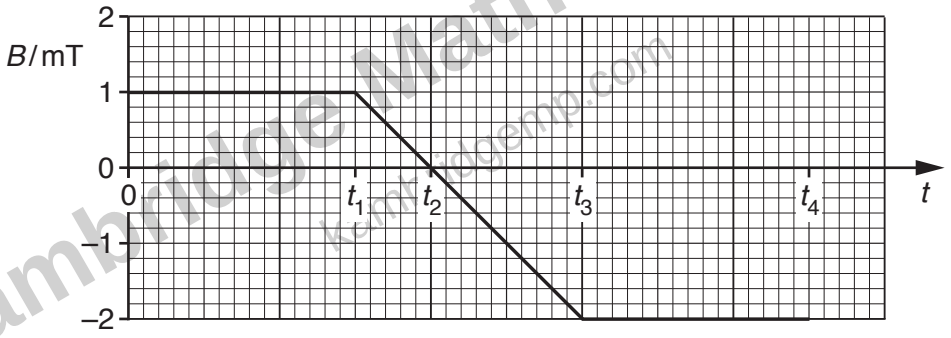

Fig. 9.2

At time $t = 0$, the Hall voltage is V_0.
On Fig. 9.3, draw a line to show the variation with time t of the Hall voltage V_H for time $t = 0$ to time $t = t_4$.

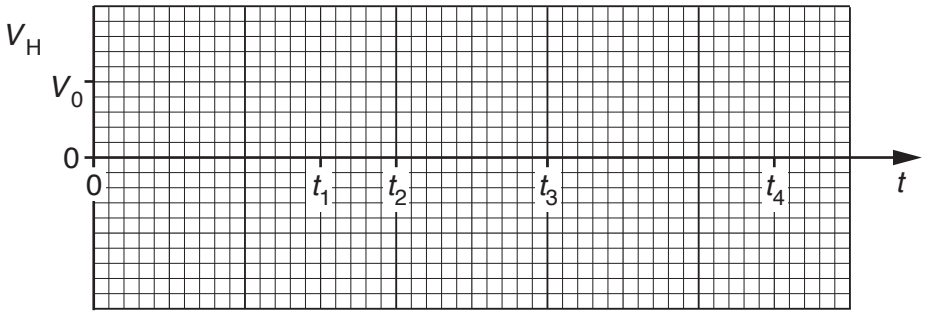

Fig. 9.3

[2]

Kambridge Math & Physics
kambridgemp.com

(b) The Hall probe in **(a)** is now replaced by a small coil of wire connected to a sensitive voltmeter, as shown in Fig. 9.4.

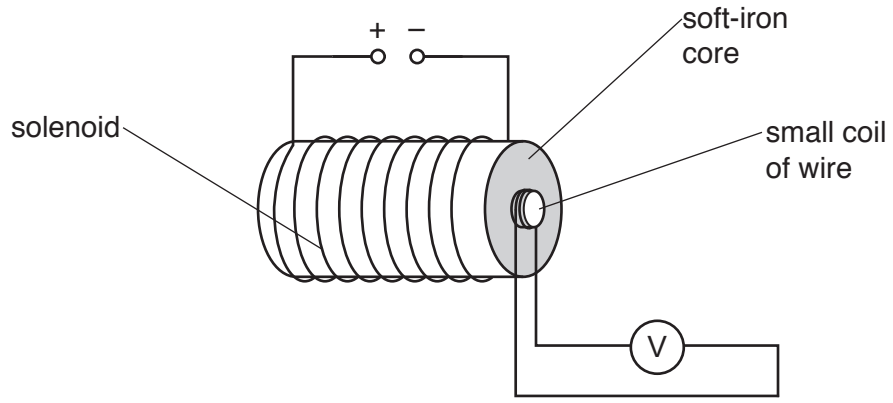

Fig. 9.4

The magnetic flux density, normal to the plane of the small coil, is again varied as shown in Fig. 9.2.

On Fig. 9.5, draw a line to show the variation with time t of the e.m.f. E induced in the small coil for time $t = 0$ to time $t = t_4$.

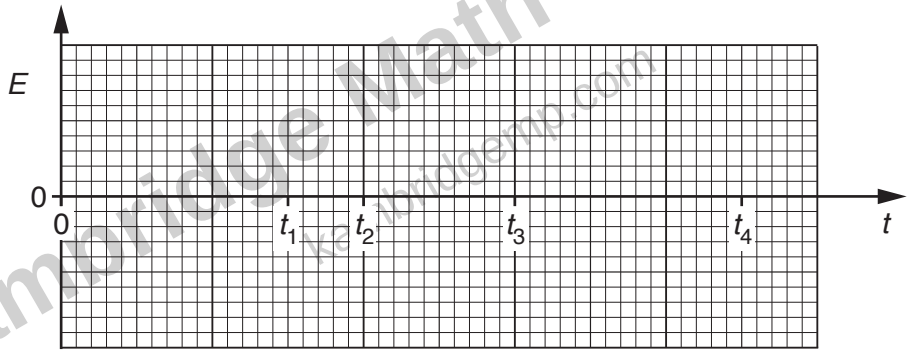

Fig. 9.5

[3]

[Total: 5]

Kamoridge Math & Physics
kambridgemp.com

10 (a) The root-mean-square (r.m.s.) value of the voltage of a sinusoidal alternating supply is 9.9 V. The frequency of the supply is 50 Hz.

Derive an expression for the variation with time t (in second) of the potential difference V (in volt) of the supply.

$V =$ ..... [2]

(b) Explain the function of the non-uniform magnetic field superposed on the large constant magnetic field in diagnosis using magnetic resonance imaging (NMRI).

.....

.....

.....

.....

.....

.....

.....[3]

Kambridge Math & Physics
kambridgemp.com

(c) A parallel beam of X-rays of intensity I_0 is incident normally on some soft tissue and bone, as illustrated in Fig. 10.1.

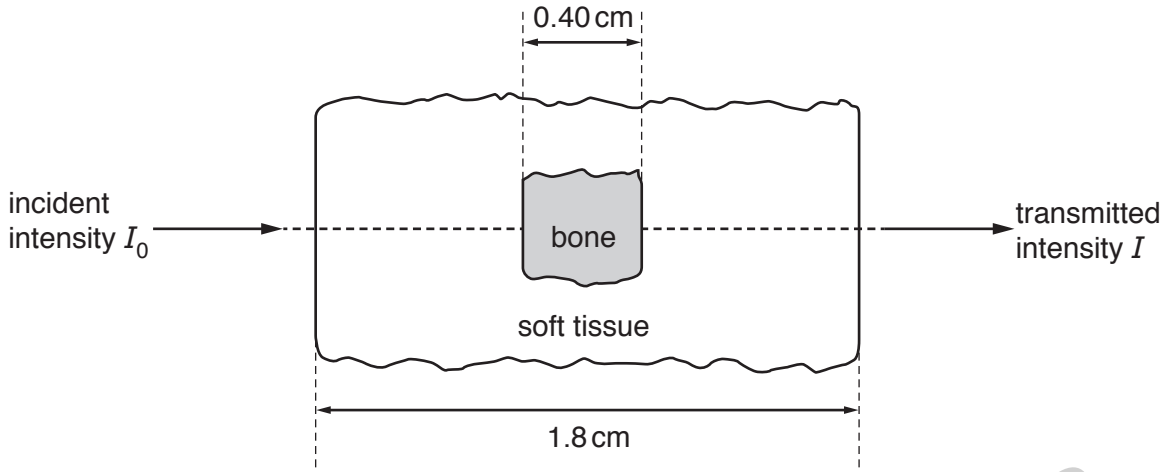

Fig. 10.1

The bone is 0.40 cm thick and the total thickness of the bone and the soft tissue is 1.8 cm. The intensity of the transmitted beam is I.

Data for the linear attenuation (absorption) coefficient μ of bone and of soft tissue are given in Fig. 10.2.

	μ / cm^{-1}
bone	2.9
soft tissue	0.92

Fig. 10.2

Kambridge Math & Physics
kambridgemp.com

Calculate, in dB, the ratio

$$\frac{\text{transmitted intensity } I}{\text{incident intensity } I_0}.$$

ratio = ... dB [4]

[Total: 9]

11 **(a)** State what is meant by a *photon*.

.....

.....

.....[2]

(b) Describe the appearance of a visible line emission spectrum, as seen using a diffraction grating.

.....

.....

.....

.....[2]

(c) The lowest electron energy levels in an isolated hydrogen atom are shown in Fig. 11.1.

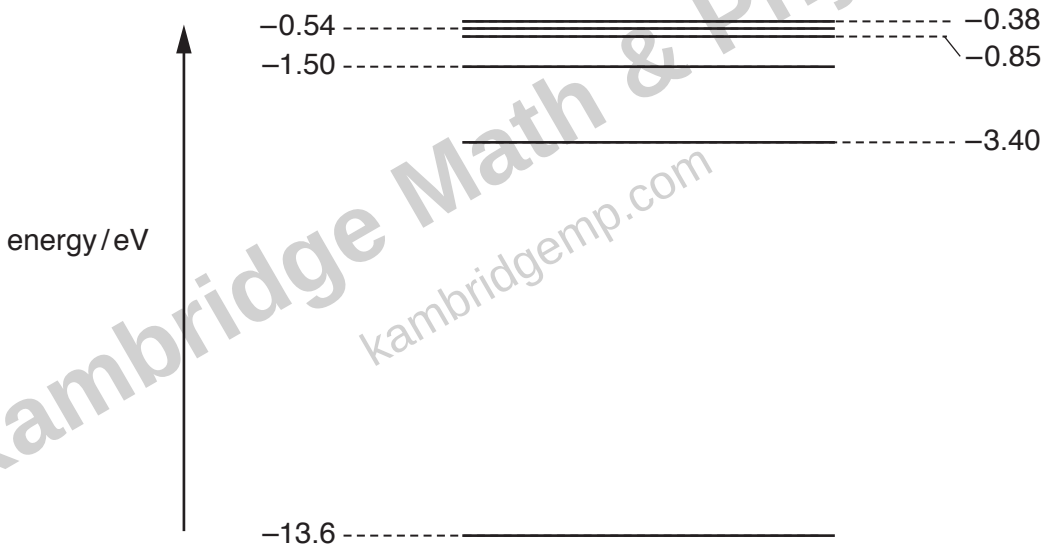

Fig. 11.1 (not to scale)

(i) An electron is initially at the energy level –0.85 eV. State the total number of different wavelengths that may be emitted as the electron de-excites (loses energy).

number = ... [1]

Kambridge Math & Physics
kambridgemp.com

(ii) Photons resulting from electron de-excitation from the –0.85 eV energy level are incident on the surface of a sample of platinum.

Platinum has a work function energy of 5.6 eV.

Determine

1. the maximum kinetic energy, in eV, of a photoelectron emitted from the surface of the platinum,

maximum energy = ... eV [2]

2. the wavelength of the photon producing the photoelectron in **(ii) part 1**.

Kambridge Math & Physics
kambridgemp.com

wavelength = ... m [3]

[Total: 10]

12 (a) State what is meant by *nuclear fusion* and *nuclear fission*.

nuclear fusion: .....

.....

.....

nuclear fission: .....

.....

.....

[3]

(b) A nuclear reaction which may, in the future, be used for the generation of electrical energy is

$$^{2}_{1}\mathrm{H} + ^{3}_{1}\mathrm{H} \longrightarrow ^{4}_{2}\mathrm{He} + \mathrm{x}.$$

(i) Name the particle x.

.....[1]

(ii) Data for the binding energy per nucleon E_B of some nuclei are given in Fig. 12.1.

		binding energy per nucleon $E_B / 10^{-13}$ J
deuterium	$^{2}_{1}\mathrm{H}$	1.7813
tritium	$^{3}_{1}\mathrm{H}$	4.5285
helium	$^{4}_{2}\mathrm{He}$	11.3290

Fig. 12.1

1. State the binding energy per nucleon of x.

binding energy per nucleon = ... J

2. Calculate the energy change that takes place in this reaction.

Kambridge Math & Physics
kambridgemp.com

energy change = ... J
[3]

(iii) Use your answer in **(ii) part 2** to determine the energy release when 2.0 g of deuterium ($^{2}_{1}\mathrm{H}$) reacts with 3.0 g of tritium ($^{3}_{1}\mathrm{H}$).

energy = ... J [1]

[Total: 8]

To avoid the issue of disclosure of answer-related information to candidates, all copyright acknowledgements are reproduced online in the Cambridge International Examinations Copyright Acknowledgements Booklet. This is produced for each series of examinations and is freely available to download at www.cie.org.uk after the live examination series.

© UCLES 2018