Cambridge Assessment International Education

Cambridge International AS & A Level

CANDIDATE NAME

CENTRE NUMBER

CANDIDATE NUMBER

6124527985

PHYSICS **9702/42**

Paper 4 A Level Structured Questions **October/November 2023**

2 hours

You must answer on the question paper.

No additional materials are needed.

INSTRUCTIONS

- Answer **all** questions.
- Use a black or dark blue pen. You may use an HB pencil for any diagrams or graphs.
- Write your name, centre number and candidate number in the boxes at the top of the page.
- Write your answer to each question in the space provided.
- Do **not** use an erasable pen or correction fluid.
- Do **not** write on any bar codes.
- You may use a calculator.
- You should show all your working and use appropriate units.

INFORMATION

- The total mark for this paper is 100.
- The number of marks for each question or part question is shown in brackets [ ].

Kambridge Math & Physics
kambridgemp.com

This document has **24** pages. Any blank pages are indicated.

© UCLES 2023

Data

acceleration of free fall	$g = 9.81\ \text{m s}^{-2}$
speed of light in free space	$c = 3.00 \times 10^{8}\ \text{m s}^{-1}$
elementary charge	$e = 1.60 \times 10^{-19}\ \text{C}$
unified atomic mass unit	$1\ \text{u} = 1.66 \times 10^{-27}\ \text{kg}$
rest mass of proton	$m_\text{p} = 1.67 \times 10^{-27}\ \text{kg}$
rest mass of electron	$m_\text{e} = 9.11 \times 10^{-31}\ \text{kg}$
Avogadro constant	$N_\text{A} = 6.02 \times 10^{23}\ \text{mol}^{-1}$
molar gas constant	$R = 8.31\ \text{J K}^{-1}\ \text{mol}^{-1}$
Boltzmann constant	$k = 1.38 \times 10^{-23}\ \text{J K}^{-1}$
gravitational constant	$G = 6.67 \times 10^{-11}\ \text{N m}^2\ \text{kg}^{-2}$
permittivity of free space	$\varepsilon_0 = 8.85 \times 10^{-12}\ \text{F m}^{-1}$ $\left(\frac{1}{4\pi\varepsilon_0} = 8.99 \times 10^{9}\ \text{m F}^{-1}\right)$
Planck constant	$h = 6.63 \times 10^{-34}\ \text{J s}$
Stefan–Boltzmann constant	$\sigma = 5.67 \times 10^{-8}\ \text{W m}^{-2}\ \text{K}^{-4}$

Formulae

uniformly accelerated motion	$s = ut + \frac{1}{2}at^2$ $v^2 = u^2 + 2as$
hydrostatic pressure	$\Delta p = \rho g \Delta h$
upthrust	$F = \rho g V$
Doppler effect for sound waves	$f_\text{o} = \frac{f_\text{s} v}{v \pm v_\text{s}}$
electric current	$I = Anvq$
resistors in series	$R = R_1 + R_2 + \ldots$
resistors in parallel	$\frac{1}{R} = \frac{1}{R_1} + \frac{1}{R_2} + \ldots$

Kambridge Math & Physics
kambridgemp.com

gravitational potential	$\phi = -\frac{GM}{r}$
gravitational potential energy	$E_P = -\frac{GMm}{r}$
pressure of an ideal gas	$p = \frac{1}{3}\frac{Nm}{V}\langle c^2 \rangle$
simple harmonic motion	$a = -\omega^2 x$
velocity of particle in s.h.m.	$v = v_0 \cos \omega t$ $v = \pm \omega \sqrt{(x_0^2 - x^2)}$
electric potential	$V = \frac{Q}{4\pi\varepsilon_0 r}$
electrical potential energy	$E_P = \frac{Qq}{4\pi\varepsilon_0 r}$
capacitors in series	$\frac{1}{C} = \frac{1}{C_1} + \frac{1}{C_2} + ...$
capacitors in parallel	$C = C_1 + C_2 + ...$
discharge of a capacitor	$x = x_0 e^{-\frac{t}{RC}}$
Hall voltage	$V_H = \frac{BI}{ntq}$
alternating current/voltage	$x = x_0 \sin \omega t$
radioactive decay	$x = x_0 e^{-\lambda t}$
decay constant	$\lambda = \frac{0.693}{t_{\frac{1}{2}}}$
intensity reflection coefficient	$\frac{I_R}{I_0} = \frac{(Z_1 - Z_2)^2}{(Z_1 + Z_2)^2}$
Stefan–Boltzmann law	$L = 4\pi\sigma r^2 T^4$
Doppler redshift	$\frac{\Delta\lambda}{\lambda} \approx \frac{\Delta f}{f} \approx \frac{v}{c}$

Kambridge Math & Physics
kambridgemp.com

1 **(a)** Define the radian.

.....

..... [1]

(b) The minute hand of a clock revolves at constant angular speed around the face of the clock, completing one revolution every hour. A small piece of modelling clay is attached to the hand with its centre of gravity at a distance L from the fixed end of the hand, as shown in Fig. 1.1.

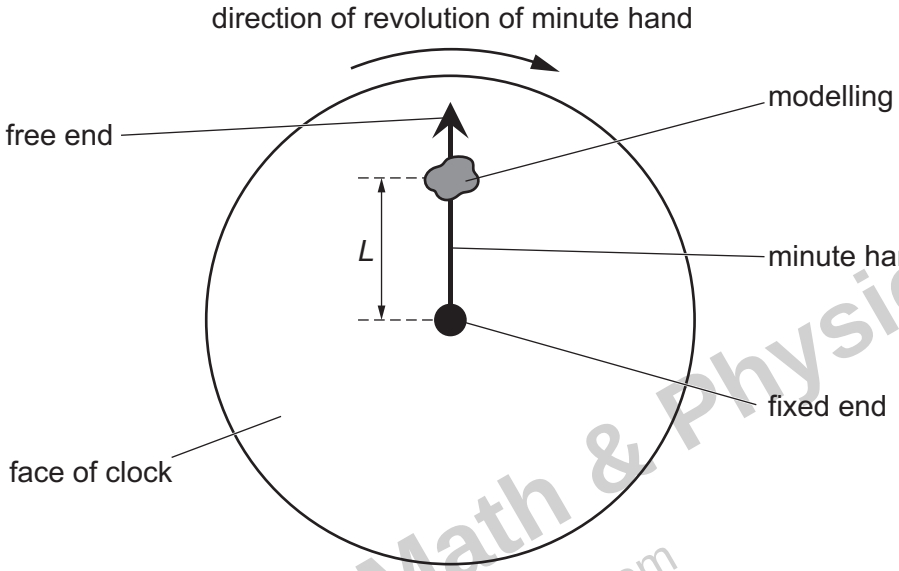

Fig. 1.1

Calculate the angular speed ω of the minute hand.

Kambridge Math & Physics
kambridgemp.com

ω = ... rad s^{-1} [2]

(c) During a time interval of 1400 s, the centre of gravity of the piece of modelling clay in Fig. 1.1 moves through a total distance of 0.44 m.

(i) Calculate the angle through which the minute hand moves in this time interval.

angle = ... rad [1]

(ii) Determine distance L.

L = ... m [2]

(iii) Calculate the magnitude of the centripetal acceleration of the piece of modelling clay.

centripetal acceleration = ... $m\,s^{-2}$ [2]

(d) Use your answer in **(c)(iii)** to explain why the variation with time of the magnitude of the force exerted by the minute hand on the piece of modelling clay is negligible as the minute hand undergoes one full revolution.

.....

.....

..... [2]

[Total: 10]

Kambridge Math & Physics
kambridgemp.com

2 **(a)** **(i)** Define gravitational potential at a point.

.....

.....

..... [2]

(ii) The Moon may be considered to be an isolated uniform sphere of mass 7.3×10^{22} kg and radius 1.7×10^{6} m.

Calculate the gravitational potential at the surface of the Moon. Give a unit with your answer.

gravitational potential = ... unit ..... [2]

(b) An isolated uniform spherical planet has gravitational potential ϕ at its surface.

A particle of mass m is projected vertically upwards from the surface. The particle is given just enough kinetic energy to travel to an infinite distance away from the planet, escaping from the gravitational pull of the planet, without any additional work being done on it.

(i) Determine an expression, in terms of m and ϕ, for the gravitational potential energy E_P of the particle at the surface of the planet.

E_P = ... [1]

(ii) Show that the speed v at which the particle is projected upwards from the surface of the planet is given by

$$v = \sqrt{-2\phi}.$$

[2]

Cambridge Math & Physics
cambridgemp.com

(c) A particle is moving upwards at the surface of the Moon.

Use your answer in **(a)(ii)** and the expression in **(b)(ii)** to determine the minimum speed of this particle that will result in it escaping from the gravitational pull of the Moon.

speed = ... $m\,s^{-1}$ [1]

(d) Hydrogen may be assumed to be an ideal gas.
The mass of a hydrogen molecule is 3.34×10^{-27} kg.

Calculate the root-mean-square (r.m.s.) speed of a hydrogen molecule in hydrogen gas that is at a temperature of 400 K.

Kambridge Math & Physics
kambridgemp.com

r.m.s. speed = ... $m\,s^{-1}$ [3]

(e) The surface of the Moon reaches temperatures of approximately 400 K when in direct sunlight.

Use your answers in **(c)** and **(d)** to suggest a reason why the Moon does not have an atmosphere consisting of hydrogen.

.....

..... [1]

[Total: 12]

BLANK PAGE

Kambridge Math & Physics
kambridgemp.com

3 **(a)** State what is meant by the internal energy of a system.

.....

.....

..... [2]

(b) Use the first law of thermodynamics to explain what happens to the internal energy:

(i) of a spring when it is stretched at constant temperature within its elastic limit

.....

.....

.....

.....

..... [3]

(ii) of a sample of water when it evaporates from a rain puddle on a hot day.

.....

.....

.....

.....

..... [3]

[Total: 8]

Kambridge Math & Physics
kambridgemp.com

4 An electron in a metal rod moves randomly about a mean position. When an alternating voltage is applied to the ends of the rod, the mean position can be considered to oscillate with simple harmonic motion along the axis of the rod. Fig. 4.1 shows the variation with time t of the displacement x of the mean position from a fixed point on the axis of the rod.

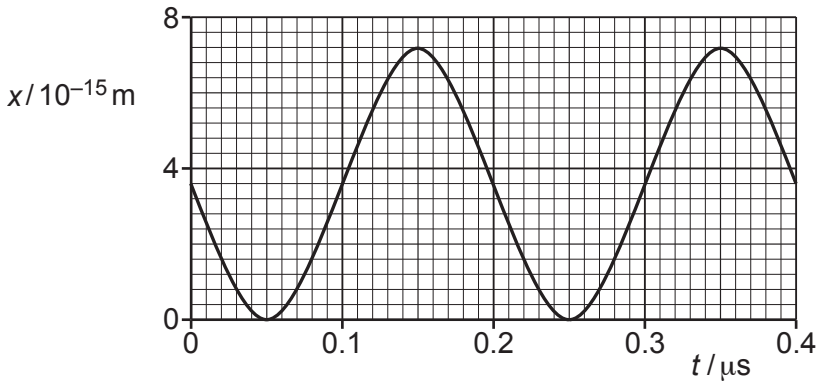

Fig. 4.1

(a) (i) Determine the amplitude of the oscillations.

amplitude = ... m [1]

(ii) Determine the angular frequency of the oscillations.

angular frequency = ... rad s^{-1} [1]

(iii) Use your answers in **(a)(i)** and **(a)(ii)** to show that the maximum drift speed v_0 of the electron is 1.1×10^{-7} m s^{-1}.

[2]

Kambridge Math & Physics
kambridgemp.com

(b) The rod has a cross-sectional area of 4.3 cm^2 and contains a number density of conduction electrons (charge carriers) of $8.5 \times 10^{28}\,m^{-3}$.

All of the conduction electrons in the rod may be assumed to be oscillating in phase with, and with the same amplitude as, the oscillation shown in Fig. 4.1.

(i) Use the information in **(a)(iii)** to calculate the magnitude I_0 of the maximum current in the rod.

I_0 = ...A [2]

(ii) On Fig. 4.2, sketch the variation of the current I in the rod with time t between t = 0 and t = 0.40 μs.

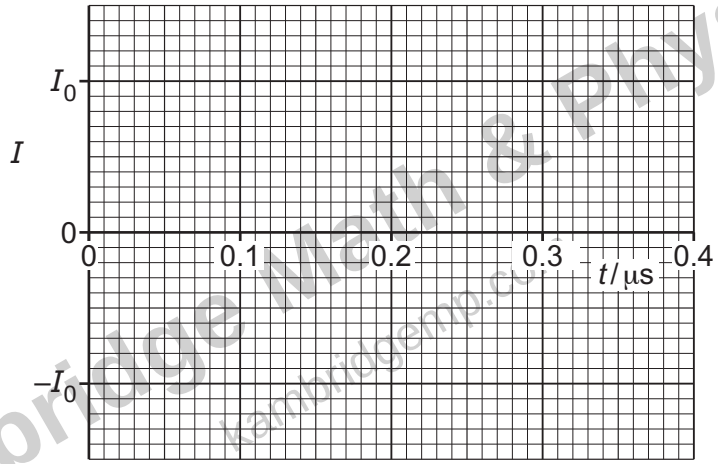

Fig. 4.2

[2]

(iii) Use your answers in **(a)(ii)** and **(b)(i)** to determine an expression for I in terms of t, where I is in A and t is in s.

I = ... [2]

(iv) Determine the root-mean-square (r.m.s.) current in the rod.

r.m.s. current = ...A [1]

[Total: 11]

Kambridge Math & Physics
kambridgemp.com

5 **(a)** State Coulomb's law.

.....

.....

..... [2]

(b) Two identical oil droplets are in a vacuum. The centres of the droplets are a distance of 3.8×10^{-6} m apart. The droplets have equal charge and exert an electric force on each other of magnitude 6.3×10^{-17} N.

Determine the magnitude of the charge on each droplet.

charge = ... C [2]

(c) One of the oil droplets in **(b)** is now placed between two horizontal metal plates, as shown in Fig. 5.1.

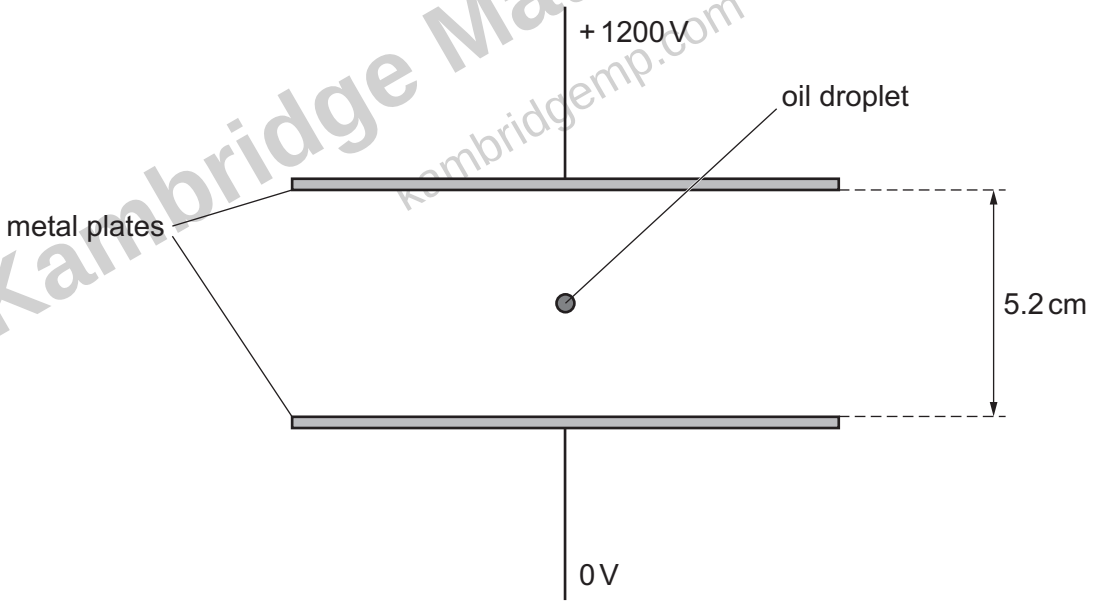

Fig. 5.1 (not to scale)

A potential difference (p.d.) of 1200 V is applied between the plates, with the top plate at the higher potential. The oil droplet is stationary and in equilibrium.

Kambridge Math & Physics
kambridgemp.com

(i) State the sign of the charge on the oil droplet.

..... [1]

(ii) On Fig. 5.1, draw four lines to represent the electric field between the plates. [3]

(iii) The distance between the plates is 5.2 cm.

Determine the mass of the oil droplet.

mass = ... kg [3]

[Total: 11]

Kambridge Math & Physics
kambridgemp.com

6 A capacitor C is charged so that the potential difference (p.d.) V across its terminals is 8.0 V. The capacitor is connected into the circuit of Fig. 6.1.

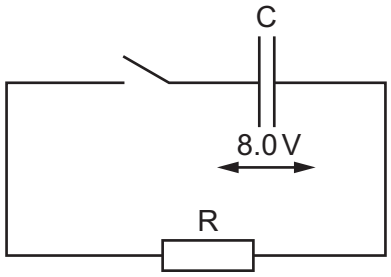

Fig. 6.1

The switch is initially open. The switch is closed at time $t = 0$.

(a) Fig. 6.2 shows the variation of V with the charge Q on the plates of capacitor C as the capacitor discharges.

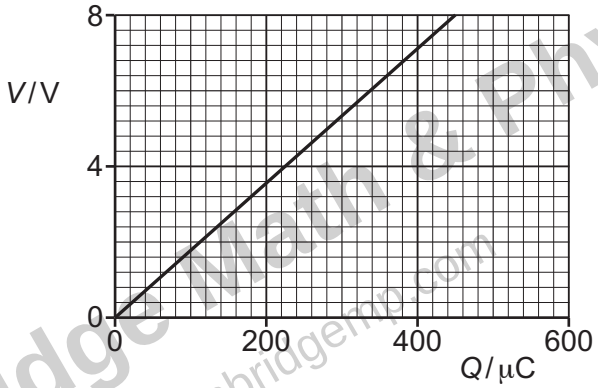

Fig. 6.2

Kambridge Math & Physics
kambridgemp.com

(i) Show that the energy stored in capacitor C at time $t = 0$ is 1.8 mJ.

[2]

(ii) Determine the capacitance of capacitor C. Give a unit with your answer.

capacitance = ... unit ..... [2]

(b) Fig. 6.3 shows the variation with t of $-\ln\left(\frac{V}{8.0\,\text{V}}\right)$.

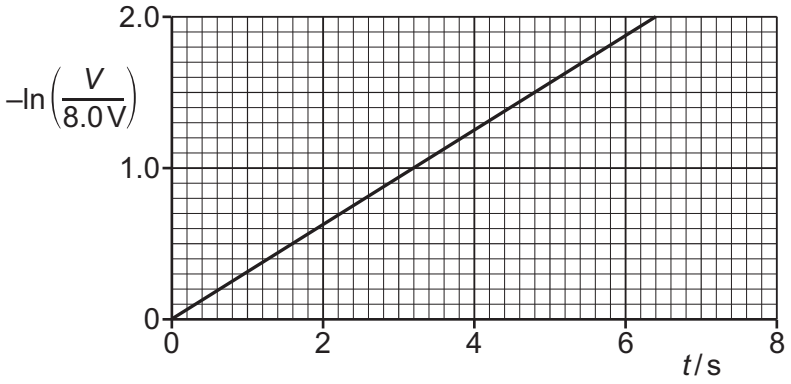

Fig. 6.3

(i) Show that, when t is equal to one time constant, the value of $-\ln\left(\frac{V}{8.0\,\text{V}}\right)$ is equal to 1.0.

[2]

(ii) Determine the time constant τ of the circuit in Fig. 6.1.

τ = ... s [1]

(iii) Calculate the resistance of resistor R.

resistance = ... Ω [2]

[Total: 9]

Kambridge Math & Physics
kambridgemp.com

7 **(a)** A Hall probe containing a thin slice of semiconducting material is placed in a uniform magnetic field of flux density B. The largest faces of the slice are perpendicular to the magnetic field, as shown in Fig. 7.1.

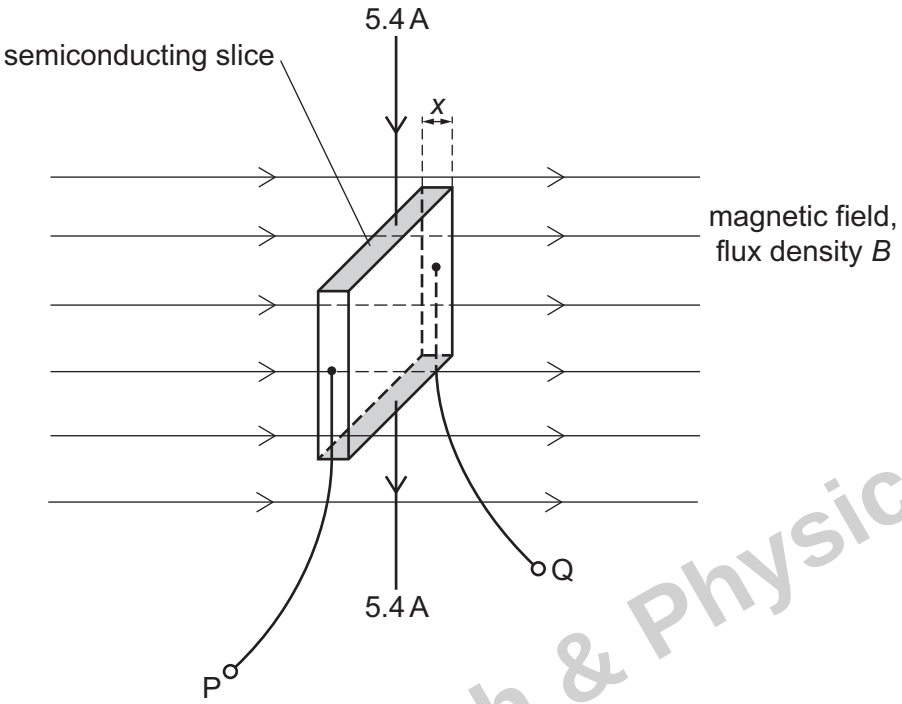

Fig. 7.1

The thickness x of the slice is 1.8 mm. The number density of charge carriers in the semiconducting material is $1.5 \times 10^{16}\,\text{m}^{-3}$.
A constant current of 5.4 A is passed through the slice between the shaded faces.
The Hall voltage V_H that is developed between the terminals PQ is recorded.

Fig. 7.2 shows the variation with time t of B.

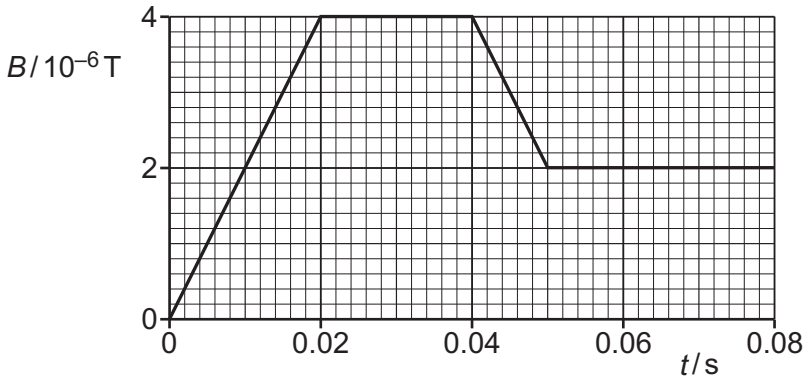

Fig. 7.2

(i) Show that, when B is equal to 4.0×10^{-6} T, the magnitude of V_H is 5.0 V.

[1]

Kambridge Math & Physics
kambridgemp.com

(ii) On Fig. 7.3, sketch the variation of V_H with t between $t = 0$ and $t = 0.080\,s$.

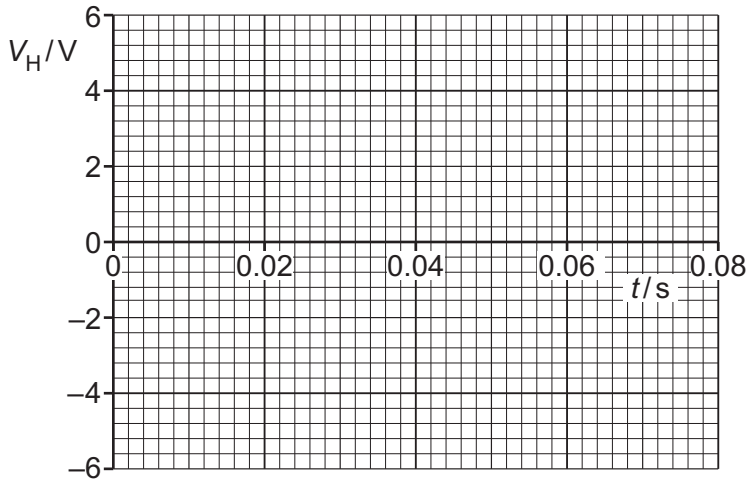

Fig. 7.3

[3]

(b) The Hall probe in **(a)** is replaced with a small flat coil that has 3000 turns. The cross-sectional area of the coil is $3.4 \times 10^{-4}\,m^2$.
The plane of the coil is perpendicular to the magnetic field. The electromotive force (e.m.f.) E induced between the terminals of the coil is recorded as B varies as shown in Fig. 7.2.

(i) Show that the magnitude of E at time $t = 0.010\,s$ is $2.0 \times 10^{-4}\,V$.

Kambridge Math & Physics
kambridgemp.com

[3]

(ii) On Fig. 7.4, sketch the variation of E with t between $t = 0$ and $t = 0.080\,s$.

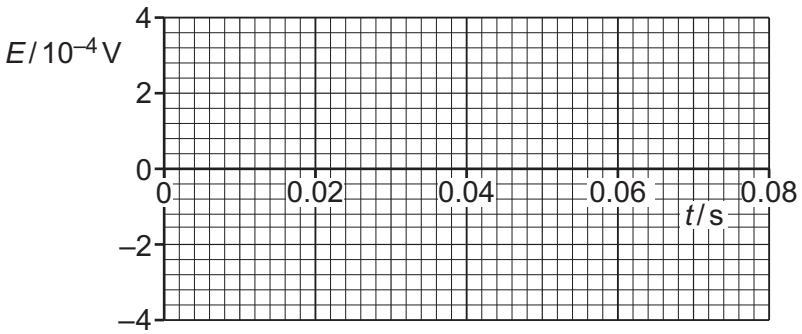

Fig. 7.4

[4]

[Total: 11]

8 **(a)** State what is meant by a photon.

.....

.....

..... [2]

(b) When the surface of a metal plate is illuminated with electromagnetic radiation, electrons are sometimes emitted from the metal.

(i) State the name of this phenomenon.

..... [1]

(ii) It is observed that this phenomenon occurs only when the frequency of the electromagnetic radiation is greater than a certain minimum value, regardless of the intensity of the radiation.

Explain how this observation provides evidence for the existence of photons.

.....

.....

.....

.....

..... [3]

(c) Fig. 8.1 shows the variation of the maximum kinetic energy of the emitted electrons in **(b)** with the frequency of the incident radiation.

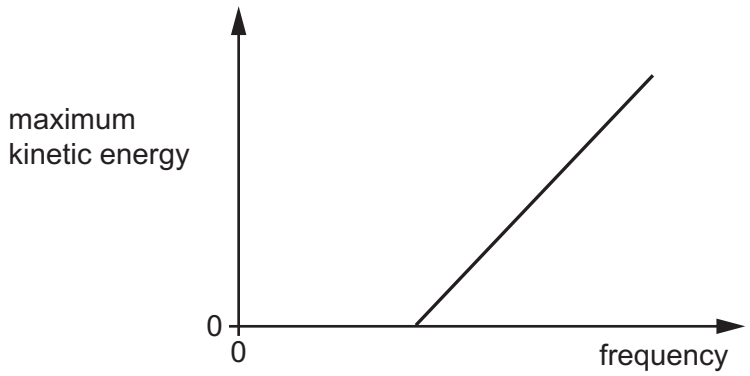

Fig. 8.1

Kambridge Math & Physics
kambridgemp.com

State the name of the quantity represented by:

(i) the gradient of the line in Fig. 8.1

..... [1]

(ii) the *y*-intercept of the extrapolated line in Fig. 8.1.

..... [1]

[Total: 8]

Kambridge Math & Physics
kambridgemp.com

9 Fluorine-18 ($^{18}_{9}F$) is a radioactive nuclide that is used as a tracer in positron emission tomography (PET scanning). Fluorine-18 decays to a nuclide of oxygen (O) according to

$$^{18}_{9}F \longrightarrow {}^{Q}_{P}X + {}^{R}_{8}O.$$

(a) (i) State what is meant by a tracer.

.....

..... [1]

(ii) State the symbol of the particle that is represented by X and the values of P, Q and R.

X: ..... P: .....

Q: ..... R: .....

[2]

(b) (i) Explain how the radioactive decay of fluorine-18 results in the emission from the body of the gamma-ray photons that are detected during a PET scan.

.....

.....

.....

..... [2]

(ii) Explain how the detection of the gamma-ray photons is used to produce an image of the tissue being examined.

.....

.....

.....

..... [2]

(c) The half-life of fluorine-18 is T.
A patient is injected with amount of substance n of fluorine-18.

(i) Determine an expression for the initial value R_0 of the rate R of production of gamma-ray photons by the tracer, in terms of n, T and the Avogadro constant N_A.

R_0 = ... [3]

Kambridge Math & Physics
kambridgemp.com

(ii) On Fig. 9.1, sketch the variation with time t of R.

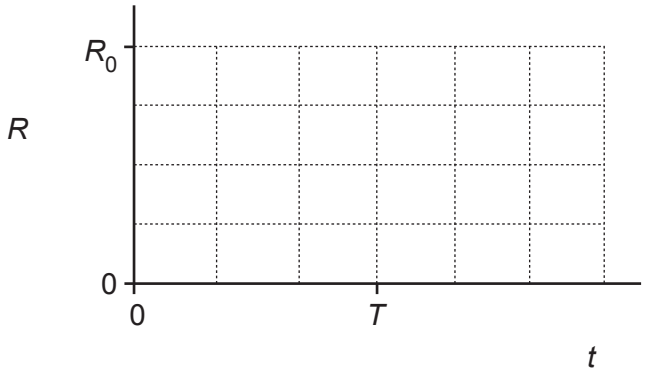

Fig. 9.1

[2]

[Total: 12]

Kambridge Math & Physics
kambridgemp.com

BLANK PAGE

Kambridge Math & Physics
kambridgemp.com

10 (a) State Wien's displacement law. Identify any symbols that you use.

.....

.....

..... [2]

(b) A cosmology student observes the electromagnetic radiation received from a star in a galaxy. The student uses Wien's law to estimate the surface temperature of the star, a standard candle to estimate the distance to the galaxy, and the Stefan–Boltzmann law to estimate the radius of the star.

The student observes that the radiation from the star is redshifted.

(i) State what is meant by a standard candle.

..... [1]

(ii) State the reason why the radiation from the star is redshifted.

..... [1]

(iii) The true values of the quantities observed or estimated are those that are corrected to allow for redshift. However, the student does not correct for redshift.

By placing one tick (✓) in each row, complete Table 10.1 to indicate how the observations and estimates made by the student compare with the true values.

Table 10.1

	student's uncorrected value		
	too low	the same	too high
wavelength of radiation			
surface temperature of star			
distance to star			
radius of star			

[4]

[Total: 8]

Kambridge Math & Physics
kambridgemp.com

BLANK PAGE

Kambridge Math & Physics
kambridgemp.com

Permission to reproduce items where third-party owned material protected by copyright is included has been sought and cleared where possible. Every reasonable effort has been made by the publisher (UCLES) to trace copyright holders, but if any items requiring clearance have unwittingly been included, the publisher will be pleased to make amends at the earliest possible opportunity.

To avoid the issue of disclosure of answer-related information to candidates, all copyright acknowledgements are reproduced online in the Cambridge Assessment International Education Copyright Acknowledgements Booklet. This is produced for each series of examinations and is freely available to download at www.cambridgeinternational.org after the live examination series.

Cambridge Assessment International Education is part of Cambridge Assessment. Cambridge Assessment is the brand name of the University of Cambridge Local Examinations Syndicate (UCLES), which is a department of the University of Cambridge.

© UCLES 2023