Cambridge Assessment International Education

Cambridge International AS & A Level

CANDIDATE NAME									
CENTRE NUMBER						CANDIDATE NUMBER				

3530429479

PHYSICS **9702/41**

Paper 4 A Level Structured Questions **October/November 2020**

2 hours

You must answer on the question paper.

No additional materials are needed.

INSTRUCTIONS

- Answer **all** questions.
- Use a black or dark blue pen. You may use an HB pencil for any diagrams or graphs.
- Write your name, centre number and candidate number in the boxes at the top of the page.
- Write your answer to each question in the space provided.
- Do **not** use an erasable pen or correction fluid.
- Do **not** write on any bar codes.
- You may use a calculator.
- You should show all your working and use appropriate units.

INFORMATION

- The total mark for this paper is 100.
- The number of marks for each question or part question is shown in brackets [ ].

Kambridge Math & Physics
kambridgemp.com

This document has **24** pages. Blank pages are indicated.

© UCLES 2020

[Turn over

Data

speed of light in free space	$c = 3.00 \times 10^{8}\,\text{m s}^{-1}$
permeability of free space	$\mu_0 = 4\pi \times 10^{-7}\,\text{H m}^{-1}$
permittivity of free space	$\varepsilon_0 = 8.85 \times 10^{-12}\,\text{F m}^{-1}$
	$(\frac{1}{4\pi\varepsilon_0} = 8.99 \times 10^{9}\,\text{m F}^{-1})$
elementary charge	$e = 1.60 \times 10^{-19}\,\text{C}$
the Planck constant	$h = 6.63 \times 10^{-34}\,\text{J s}$
unified atomic mass unit	$1\,\text{u} = 1.66 \times 10^{-27}\,\text{kg}$
rest mass of electron	$m_e = 9.11 \times 10^{-31}\,\text{kg}$
rest mass of proton	$m_p = 1.67 \times 10^{-27}\,\text{kg}$
molar gas constant	$R = 8.31\,\text{J K}^{-1}\,\text{mol}^{-1}$
the Avogadro constant	$N_A = 6.02 \times 10^{23}\,\text{mol}^{-1}$
the Boltzmann constant	$k = 1.38 \times 10^{-23}\,\text{J K}^{-1}$
gravitational constant	$G = 6.67 \times 10^{-11}\,\text{N m}^2\,\text{kg}^{-2}$
acceleration of free fall	$g = 9.81\,\text{m s}^{-2}$

Kambridge Math & Physics
kambridgemp.com

Formulae

uniformly accelerated motion	$s = ut + \frac{1}{2}at^2$ $v^2 = u^2 + 2as$
work done on/by a gas	$W = p\Delta V$
gravitational potential	$\phi = -\frac{Gm}{r}$
hydrostatic pressure	$p = \rho gh$
pressure of an ideal gas	$p = \frac{1}{3}\frac{Nm}{V}\langle c^2 \rangle$
simple harmonic motion	$a = -\omega^2 x$
velocity of particle in s.h.m.	$v = v_0 \cos \omega t$ $v = \pm \omega \sqrt{(x_0^2 - x^2)}$
Doppler effect	$f_o = \frac{f_s v}{v \pm v_s}$
electric potential	$V = \frac{Q}{4\pi\varepsilon_0 r}$
capacitors in series	$1/C = 1/C_1 + 1/C_2 + \ldots$
capacitors in parallel	$C = C_1 + C_2 + \ldots$
energy of charged capacitor	$W = \frac{1}{2}QV$
electric current	$I = Anvq$
resistors in series	$R = R_1 + R_2 + \ldots$
resistors in parallel	$1/R = 1/R_1 + 1/R_2 + \ldots$
Hall voltage	$V_H = \frac{BI}{ntq}$
alternating current/voltage	$x = x_0 \sin \omega t$
radioactive decay	$x = x_0 \exp(-\lambda t)$
decay constant	$\lambda = \frac{0.693}{t_{\frac{1}{2}}}$

Kambridge Math & Physics
kambridgemp.com

BLANK PAGE

Kambridge Math & Physics
kambridgemp.com

Answer **all** the questions in the spaces provided.

1 **(a)** **(i)** State what is meant by a *field of force*.

.....

.....

..... [2]

(ii) Define *gravitational field strength*.

.....

..... [1]

(b) An isolated planet may be assumed to be a uniform sphere of radius 3.39×10^6 m with its mass of 6.42×10^{23} kg concentrated at its centre.

Calculate the gravitational field strength at the surface of the planet.

field strength = ... $N\,kg^{-1}$ [3]

(c) Calculate the height above the surface of the planet in **(b)** at which the gravitational field strength is 1.0% less than its value at the surface of the planet.

height = ... m [3]

[Total: 9]

Kambridge Math & Physics
kambridgemp.com

2 **(a)** The first law of thermodynamics may be expressed as

$$\Delta U = (+q) + (+w)$$

where ΔU is the increase in internal energy of the system.

State the meaning of:

$+q$ .....

.....

$+w$. .....

.....

[2]

(b) The variation with pressure p of the volume V of a fixed mass of an ideal gas is shown in Fig. 2.1.

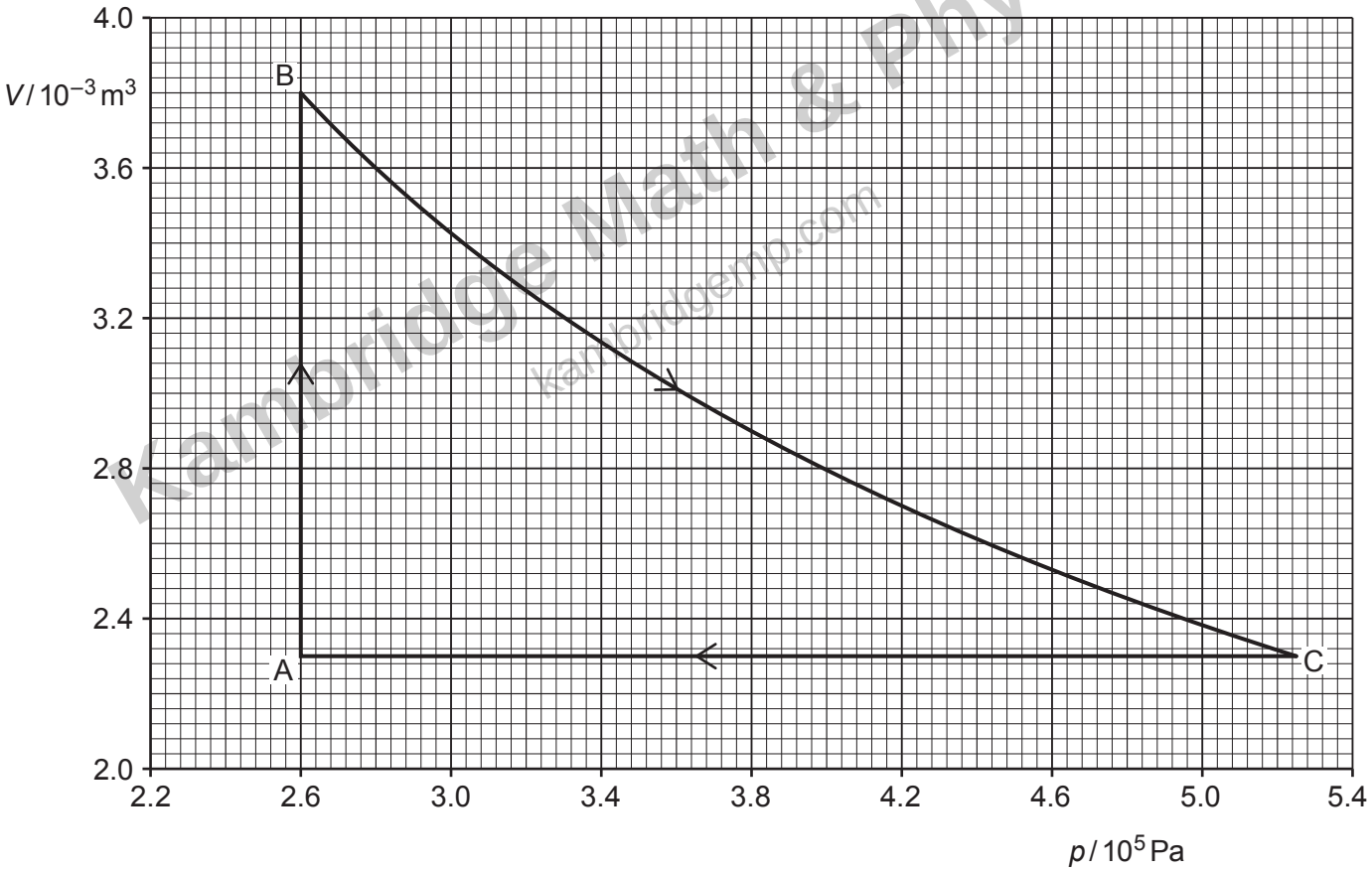

Fig. 2.1

The gas undergoes a cycle of changes A to B to C to A.

During the change A to B, the volume of the gas increases from $2.3 \times 10^{-3}\,m^3$ to $3.8 \times 10^{-3}\,m^3$.

Cambridge Math & Physics
kambridgemp.com

(i) Show that the magnitude of the work done during the change A to B is 390 J.

[1]

(ii) State and explain the total change, if any, in the internal energy of the gas during one complete cycle.

.....

.....

..... [2]

(c) During the change A to B, 1370 J of thermal energy is transferred to the gas.

During the change B to C, no thermal energy enters or leaves the gas. The work done on the gas during this change is 550 J.

Use these data and the information in **(b)** to complete Table 2.1.

Table 2.1

change	q / J	w / J	ΔU / J
A to B	.....	.....	.....
B to C	.....	.....	.....
C to A	.....	.....	.....

[4]

[Total: 9]

Kambridge Math & Physics
kambridgemp.com

3 A pendulum consists of a metal sphere P suspended from a fixed point by means of a thread, as illustrated in Fig. 3.1.

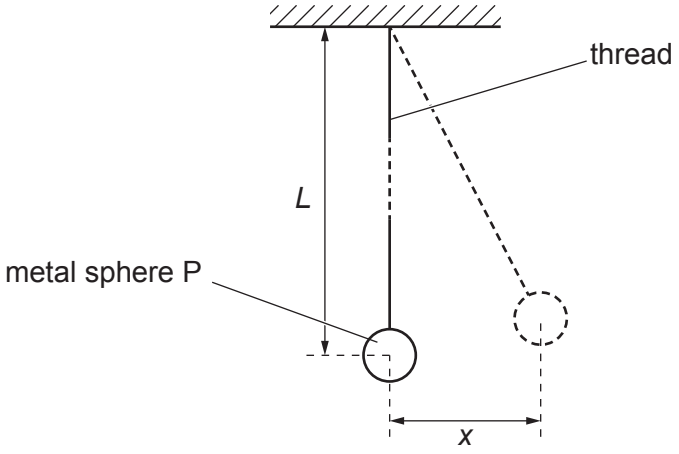

Fig. 3.1

The centre of gravity of sphere P is a distance *L* from the fixed point.

The sphere is pulled to one side and then released so that it oscillates. The sphere may be assumed to oscillate with simple harmonic motion.

(a) State what is meant by *simple harmonic motion*.

.....

.....

..... [2]

(b) The variation of the velocity *v* of sphere P with the displacement *x* from its mean position is shown in Fig. 3.2.

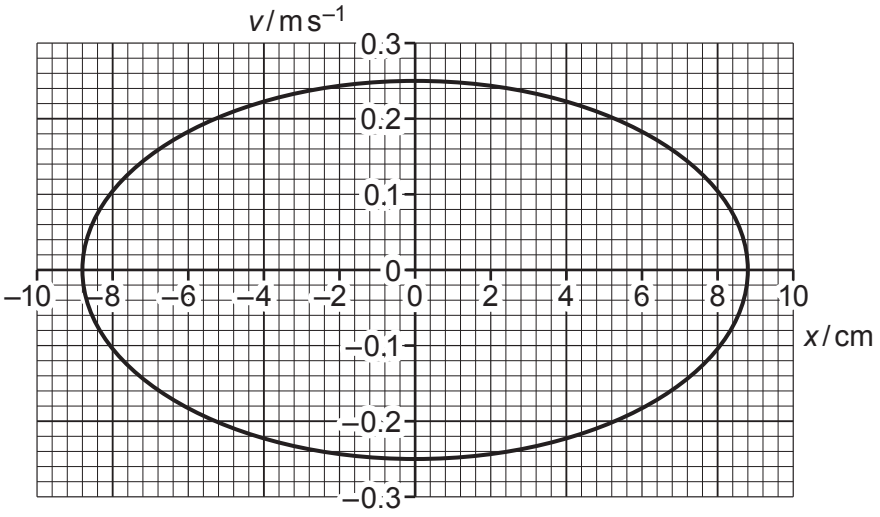

Fig. 3.2

Kambridge Math & Physics
kambridgemp.com

Use Fig. 3.2 to determine the frequency f of the oscillations of sphere P.

f = ... Hz [3]

(c) The period T of the oscillations of sphere P is given by the expression

$$T = 2\pi\sqrt{\left(\frac{L}{g}\right)}$$

where g is the acceleration of free fall.

Use your answer in **(b)** to determine the length L.

Kambridge Math & Physics
kambridgemp.com

L = ... m [2]

(d) Another pendulum consists of a sphere Q suspended by a thread. Spheres P and Q are identical. The thread attached to sphere Q is longer than the thread attached to sphere P.

Sphere Q is displaced and then released. The oscillations of sphere Q have the same amplitude as the oscillations of sphere P.

On Fig. 3.2, sketch the variation of the velocity v with displacement x for sphere Q. [2]

[Total: 9]

BLANK PAGE

Kambridge Math & Physics
kambridgemp.com

4 **(a)** Explain the principles of the **generation** of ultrasound waves for use in medical diagnosis.

.....

.....

.....

.....

.....

.....

.....

..... [4]

(b) The linear attenuation (absorption) coefficient for a parallel beam of ultrasound waves in air is $1.2\,\text{cm}^{-1}$.

The parallel beam passes through a layer of air of thickness 3.5 cm.

Calculate the ratio, in dB,

$$\frac{\text{intensity of beam after passing through the layer of air}}{\text{intensity of beam entering the layer of air}}.$$

Kambridge Math & Physics
kambridgemp.com

ratio = ... dB [4]

[Total: 8]

5 **(a)** Define *electric potential* at a point.

.....

.....

..... [2]

(b) Two point charges A and B are separated by a distance of 12.0 cm in a vacuum, as illustrated in Fig. 5.1.

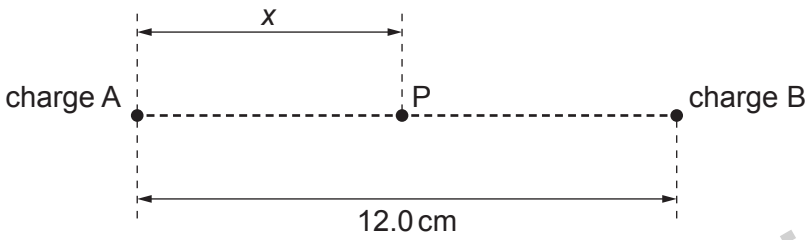

Fig. 5.1

The charge of A is $+2.0 \times 10^{-9}$ C.

A point P lies on the line joining charges A and B. Its distance from charge A is x.

The variation with distance x of the electric potential V at point P is shown in Fig. 5.2.

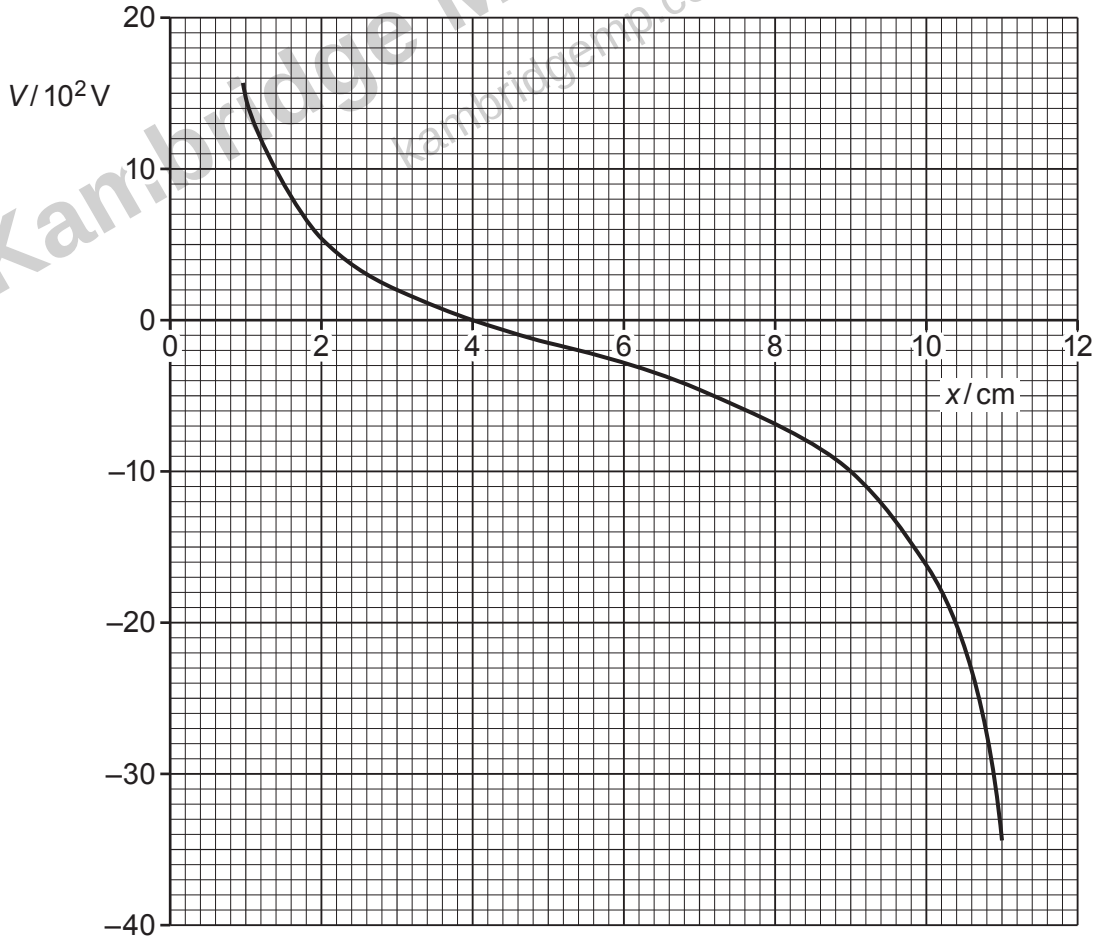

Fig. 5.2

Kambridge Math & Physics
kambridgemp.com

Use Fig. 5.2 to determine:

(i) the charge of B

charge = ... C [3]

(ii) the change in electric potential when point P moves from the position where $x = 9.0\,\text{cm}$ to the position where $x = 3.0\,\text{cm}$.

change = ... V [1]

(c) An α-particle moves along the line joining point charges A and B in Fig. 5.1.

The α-particle moves from the position where $x = 9.0\,\text{cm}$ and just reaches the position where $x = 3.0\,\text{cm}$.

Use your answer in **(b)(ii)** to calculate the speed v of the α-particle at the position where $x = 9.0\,\text{cm}$.

v = ... m s^{-1} [3]

[Total: 9]

Kambridge Math & Physics
kambridgemp.com

6 **(a)** **(i)** Define the *capacitance* of a parallel plate capacitor.

.....

.....

..... [2]

(ii) State **three** functions of capacitors in electrical circuits.

1. .....

2. .....

3. .....

[3]

(b) A student has available four capacitors, each of capacitance 24 μF.

The capacitors are connected as shown in Fig. 6.1.

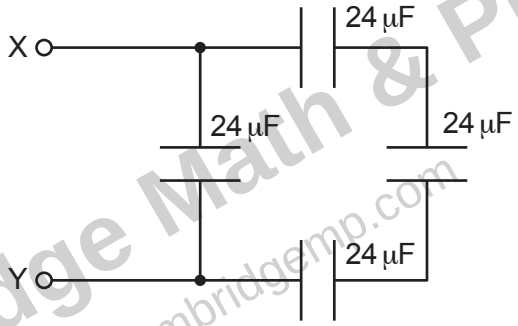

Fig. 6.1

Calculate the combined capacitance between the terminals X and Y.

capacitance = ... μF [2]

[Total: 7]

Kambridge Math & Physics
kambridgemp.com

7 An ideal operational amplifier (op-amp) is to be used in a comparator circuit.
Part of the comparator circuit is shown in Fig. 7.1.

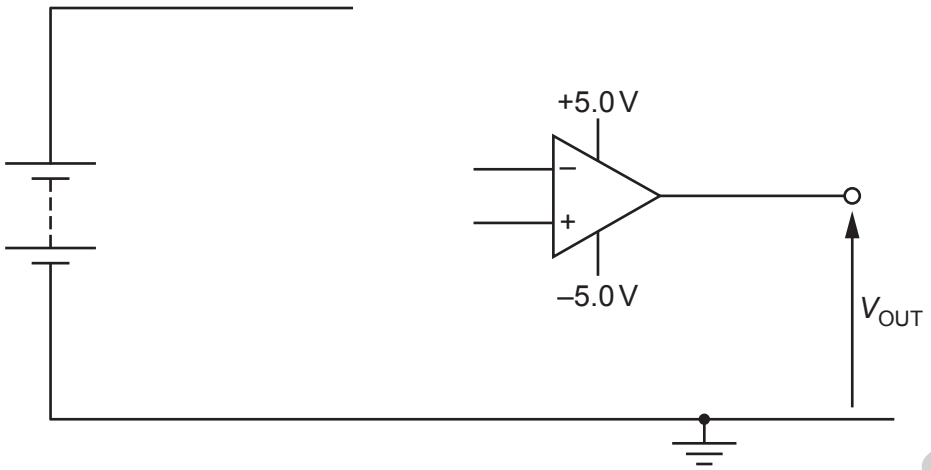

Fig. 7.1

Three resistors, each of resistance 1000 Ω, and a negative temperature coefficient thermistor are available to complete the circuit.

The circuit is to be designed so that, at low temperatures, the output V_{OUT} is –5.0 V and at higher temperatures, the output V_{OUT} is to be +5.0 V.

(a) On Fig. 7.1, draw the input circuit to the inverting and non-inverting inputs of the op-amp. [4]

(b) State a suitable value for the thermistor resistance when the thermistor is at:

(i) low temperature where V_{OUT} is –5.0 V

..... [1]

(ii) a higher temperature where V_{OUT} is +5.0 V.

..... [1]

[Total: 6]

Kambridge Math & Physics
kambridgemp.com

8 A slice of a conducting material has its face QRLK normal to a uniform magnetic field of flux density *B*, as illustrated in Fig. 8.1.

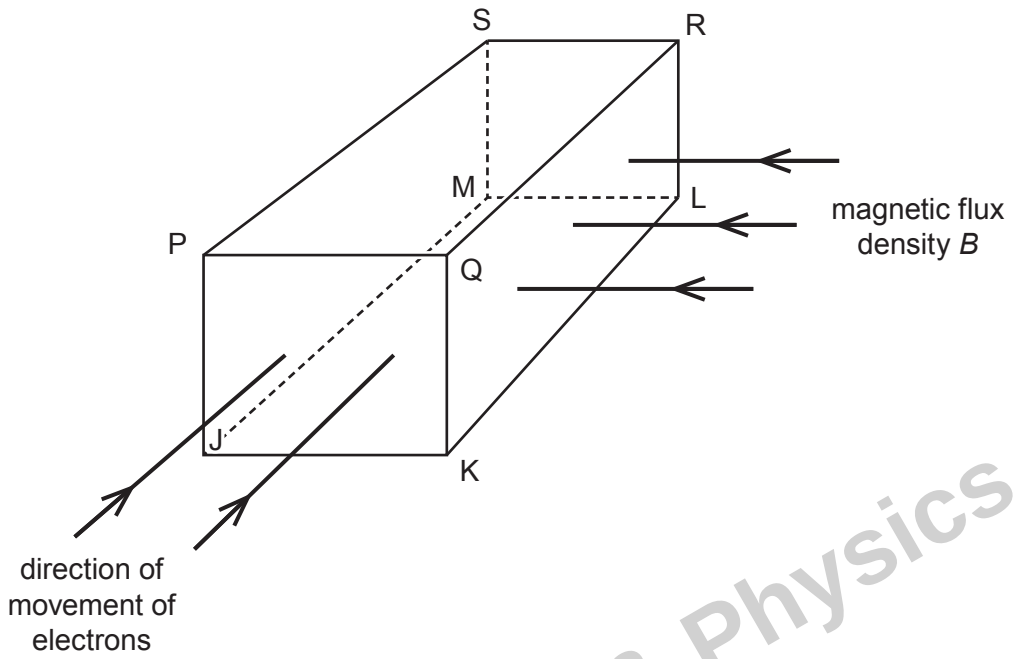

Fig. 8.1

Electrons enter the slice travelling perpendicular to face PQKJ.

(a) For the free electrons moving in the slice:

(i) state the direction of the force on an electron due to movement of the electron in the magnetic field

.....

..... [1]

(ii) identify the faces, using the letters on Fig. 8.1, between which a potential difference is developed.

face ..... and face ..... [1]

(b) Explain why the potential difference in **(a)(ii)** reaches a maximum value.

.....

.....

..... [2]

Kambridge Math & Physics
kambridgemp.com

(c) The number of free electrons per unit volume in the slice of material is $1.3 \times 10^{29}\,m^{-3}$.
The thickness PQ of the slice is 0.10 mm.
The magnetic flux density B is 4.6×10^{-3} T.

Calculate the potential difference across the slice for a current of 6.3×10^{-4} A.

potential difference = ... V [2]

(d) The slice in **(c)** is a metal.

By reference to your answer in **(c)**, suggest why Hall probes are usually made using semiconductors rather than metals.

.....

.....

..... [2]

[Total: 8]

Kambridge Math & Physics
kambridgemp.com

9 **(a)** Define *magnetic flux*.

.....

.....

..... [2]

(b) A simple transformer consists of two coils of wire wound on a soft-iron core, as illustrated in Fig. 9.1.

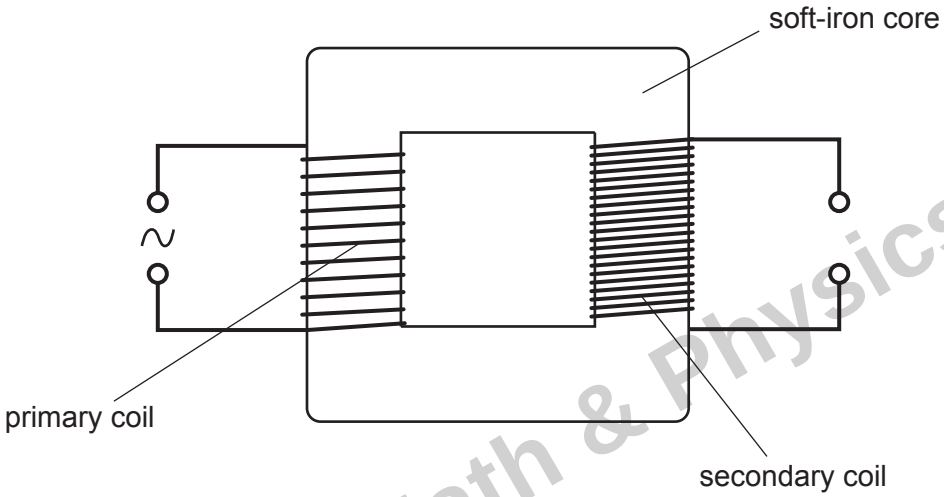

Fig. 9.1

There is a sinusoidal current in the primary coil.

Explain:

(i) how this current gives rise to an induced electromotive force (e.m.f.) in the secondary coil

.....

.....

.....

.....

..... [3]

(ii) why the e.m.f. induced in the secondary coil is not constant.

.....

.....

.....

..... [2]

Kambridge Math & Physics
kambridgemp.com

(c) Explain why the soft-iron core in **(b)** is laminated.

.....

.....

..... [2]

[Total: 9]

Kambridge Math & Physics
kambridgemp.com

10 (a) Outline briefly the principles of computed tomography (CT scanning).

.....

.....

.....

.....

.....

.....

.....

.....

.....

..... [5]

Kambridge Math & Physics
kambridgemp.com

(b) One section of a model designed to illustrate CT scanning is divided into four voxels. The pixel numbers K, L, M and N of the voxels are shown in Fig. 10.1.

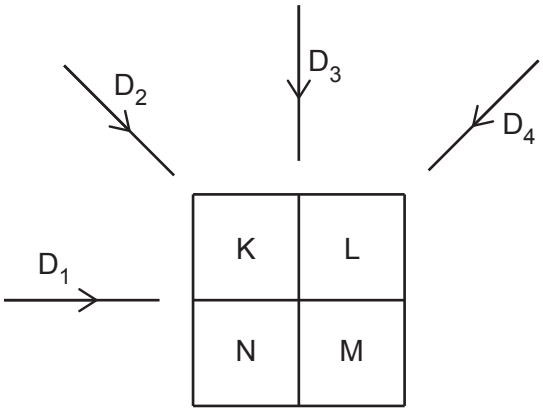

Fig. 10.1

The section is viewed, in turn, from four different directions D_1, D_2, D_3 and D_4, as shown in Fig. 10.1.

The detector readings for each direction are noted and these are summed to give the values shown in Fig. 10.2.

42	45
51	30

Fig. 10.2

The background reading is 24.

Determine the pixel numbers K, L, M and N shown in Fig. 10.1.

K = ...

L = ...

M = ...

N = ...

[3]

[Total: 8]

Kambridge Math & Physics
kambridgemp.com

11 A photon of wavelength 540 nm collides with an isolated stationary electron, as illustrated in Fig. 11.1.

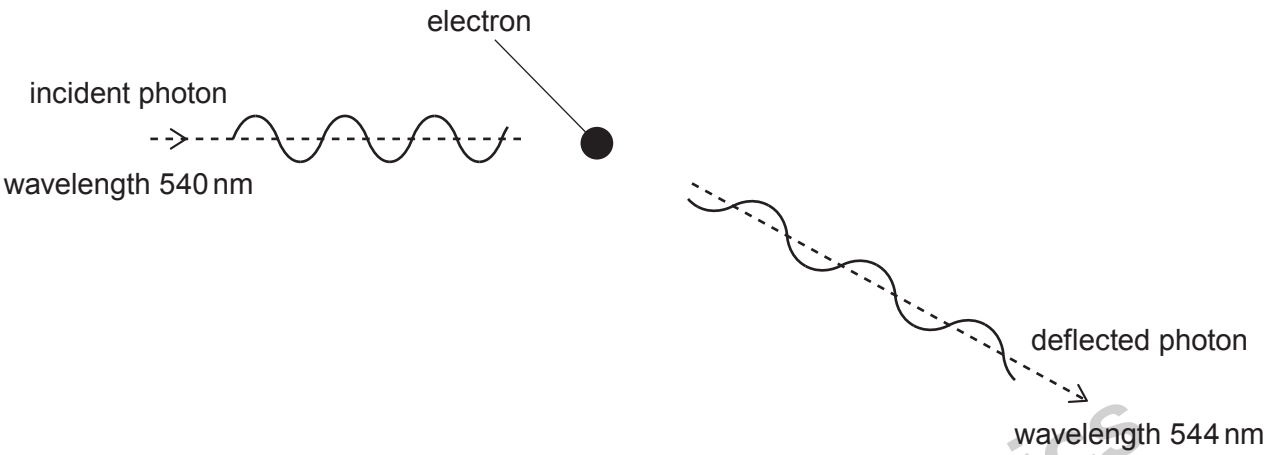

Fig. 11.1

The photon is deflected elastically by the electron.
The wavelength of the deflected photon is 544 nm.

(a) (i) State what is meant by a *photon*.

.....

.....

..... [2]

(ii) On Fig. 11.1, draw an arrow to indicate the approximate direction of motion of the deflected electron. [1]

Kambridge Math & Physics
kambridgemp.com

(b) Calculate:

(i) the momentum of the deflected photon

momentum = ... N s [2]

(ii) the energy transferred to the deflected electron.

energy = ... J [2]

(c) Another photon of wavelength 540 nm collides with an isolated stationary electron.

Explain why it is not possible for the deflected photon to have a wavelength less than 540 nm.

.....

.....

..... [2]

[Total: 9]

Kambridge Math & Physics
kambridgemp.com

12 Iodine-131 ($^{131}_{53}\mathrm{I}$) is a radioactive isotope with a decay constant of $9.9 \times 10^{-7}\,\mathrm{s}^{-1}$.

(a) State what is meant by:

(i) *radioactive*

.....

.....

..... [2]

(ii) *decay constant.*

.....

.....

..... [2]

(b) Some water becomes contaminated with iodine-131.
The activity of the iodine-131 in 1.0 kg of water is 560 Bq.

Determine the number of iodine-131 atoms in 1.0 kg of water.

Kambridge Math & Physics
kambridgemp.com

number = ... [2]

(c) Regulations require that the activity of iodine-131 in 1.0 kg of water is to be less than 170 Bq.

Calculate the time, in days, for the activity of the contaminated water in **(b)** to be reduced to 170 Bq.

time = ... days [3]

[Total: 9]

To avoid the issue of disclosure of answer-related information to candidates, all copyright acknowledgements are reproduced online in the Cambridge Assessment International Education Copyright Acknowledgements Booklet. This is produced for each series of examinations and is freely available to download at www.cambridgeinternational.org after the live examination series.

© UCLES 2020