Cambridge International AS & A Level

Cambridge Assessment International Education
Cambridge International Advanced Subsidiary and Advanced Level

CANDIDATE NAME

CENTRE NUMBER

CANDIDATE NUMBER

7084266478

PHYSICS **9702/42**

Paper 4 A Level Structured Questions **October/November 2019**

2 hours

Candidates answer on the Question Paper.

No Additional Materials are required.

READ THESE INSTRUCTIONS FIRST

Write your centre number, candidate number and name on all the work you hand in.
Write in dark blue or black pen.
You may use an HB pencil for any diagrams or graphs.
Do not use staples, paper clips, glue or correction fluid.
DO **NOT** WRITE IN ANY BARCODES.

Answer **all** questions.

Electronic calculators may be used.
You may lose marks if you do not show your working or if you do not use appropriate units.

At the end of the examination, fasten all your work securely together.
The number of marks is given in brackets [ ] at the end of each question or part question.

Cambridge Math & Physics
cambridgemp.com

This document consists of **27** printed pages and **1** blank page.

© UCLES 2019

Data

speed of light in free space	$c = 3.00 \times 10^{8}\,\text{m s}^{-1}$
permeability of free space	$\mu_0 = 4\pi \times 10^{-7}\,\text{H m}^{-1}$
permittivity of free space	$\varepsilon_0 = 8.85 \times 10^{-12}\,\text{F m}^{-1}$
	$(\frac{1}{4\pi\varepsilon_0} = 8.99 \times 10^{9}\,\text{m F}^{-1})$
elementary charge	$e = 1.60 \times 10^{-19}\,\text{C}$
the Planck constant	$h = 6.63 \times 10^{-34}\,\text{J s}$
unified atomic mass unit	$1\,\text{u} = 1.66 \times 10^{-27}\,\text{kg}$
rest mass of electron	$m_e = 9.11 \times 10^{-31}\,\text{kg}$
rest mass of proton	$m_p = 1.67 \times 10^{-27}\,\text{kg}$
molar gas constant	$R = 8.31\,\text{J K}^{-1}\,\text{mol}^{-1}$
the Avogadro constant	$N_A = 6.02 \times 10^{23}\,\text{mol}^{-1}$
the Boltzmann constant	$k = 1.38 \times 10^{-23}\,\text{J K}^{-1}$
gravitational constant	$G = 6.67 \times 10^{-11}\,\text{N m}^2\,\text{kg}^{-2}$
acceleration of free fall	$g = 9.81\,\text{m s}^{-2}$

Kambridge Math & Physics
kambridgemp.com

© UCLES 2019

Formulae

uniformly accelerated motion	$s = ut + \frac{1}{2}at^2$ $v^2 = u^2 + 2as$
work done on/by a gas	$W = p\Delta V$
gravitational potential	$\phi = -\frac{Gm}{r}$
hydrostatic pressure	$p = \rho gh$
pressure of an ideal gas	$p = \frac{1}{3}\frac{Nm}{V}\langle c^2 \rangle$
simple harmonic motion	$a = -\omega^2 x$
velocity of particle in s.h.m.	$v = v_0 \cos \omega t$ $v = \pm \omega \sqrt{(x_0^2 - x^2)}$
Doppler effect	$f_o = \frac{f_s v}{v \pm v_s}$
electric potential	$V = \frac{Q}{4\pi\varepsilon_0 r}$
capacitors in series	$1/C = 1/C_1 + 1/C_2 + \ldots$
capacitors in parallel	$C = C_1 + C_2 + \ldots$
energy of charged capacitor	$W = \frac{1}{2}QV$
electric current	$I = Anvq$
resistors in series	$R = R_1 + R_2 + \ldots$
resistors in parallel	$1/R = 1/R_1 + 1/R_2 + \ldots$
Hall voltage	$V_H = \frac{BI}{ntq}$
alternating current/voltage	$x = x_0 \sin \omega t$
radioactive decay	$x = x_0 \exp(-\lambda t)$
decay constant	$\lambda = \frac{0.693}{t_{\frac{1}{2}}}$

Kambridge Math & Physics
kambridgemp.com

Answer **all** the questions in the spaces provided.

1 **(a)** State Newton's law of gravitation.

.....

.....

..... [2]

(b) The astronomer Johannes Kepler showed that the period T of rotation of a planet about the Sun is related to its mean distance R from the centre of the Sun by the expression

$$\frac{R^3}{T^2} = k$$

where k is a constant.

Use Newton's law to show that, for planets in circular orbits about the Sun of mass M, the constant k is given by

$$k = \frac{GM}{4\pi^2}$$

where G is the gravitational constant. Explain your working.

Kambridge Math & Physics
kambridgemp.com

[4]

(c) A satellite is in a circular orbit about Mars.
The radius of the orbit of the satellite is 4.38×10^6 m. The orbital period is 2.44 hours.

Use the expressions in **(b)** to calculate a value for the mass of Mars.

mass = ... kg [2]

[Total: 8]

2 **(a)** Smoke particles are suspended in still air. Brownian motion of the smoke particles is seen through a microscope.

Describe:

(i) what is seen through the microscope

.....

..... [1]

(ii) how Brownian motion provides evidence for the nature of the movement of gas molecules.

.....

.....

..... [2]

(b) A fixed mass of an ideal gas has volume $2.40 \times 10^3\,cm^3$ at pressure $3.51 \times 10^5\,Pa$ and temperature 290 K. The gas is heated at constant volume until the temperature is 310 K at pressure $3.75 \times 10^5\,Pa$, as illustrated in Fig. 2.1.

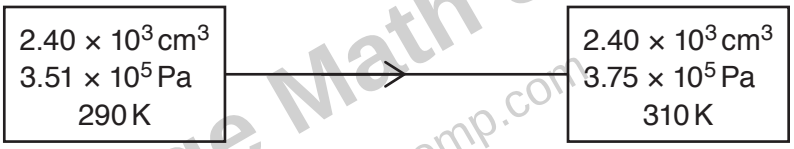

Fig. 2.1

The quantity of thermal energy required to raise the temperature of 1.00 mol of the gas by 1.00 K at constant volume is 12.5 J.

Calculate, to three significant figures:

(i) the amount, in mol, of the gas

amount = ... mol [3]

Kambridge Math & Physics
kambridgemp.com

(ii) the thermal energy transfer during the change.

energy transfer = ... J [2]

(c) For the change in the gas in **(b)**, state:

(i) the quantity of external work done on the gas

work done = ... J [1]

(ii) the change in internal energy, with the direction of this change.

change = ... J

direction .....
[2]

[Total: 11]

Kambridge Math & Physics
kambridgemp.com

3 **(a)** State what is meant by *specific latent heat*.

.....

.....

..... [2]

(b) A student uses the apparatus illustrated in Fig. 3.1 to determine a value for the specific latent heat of fusion of ice.

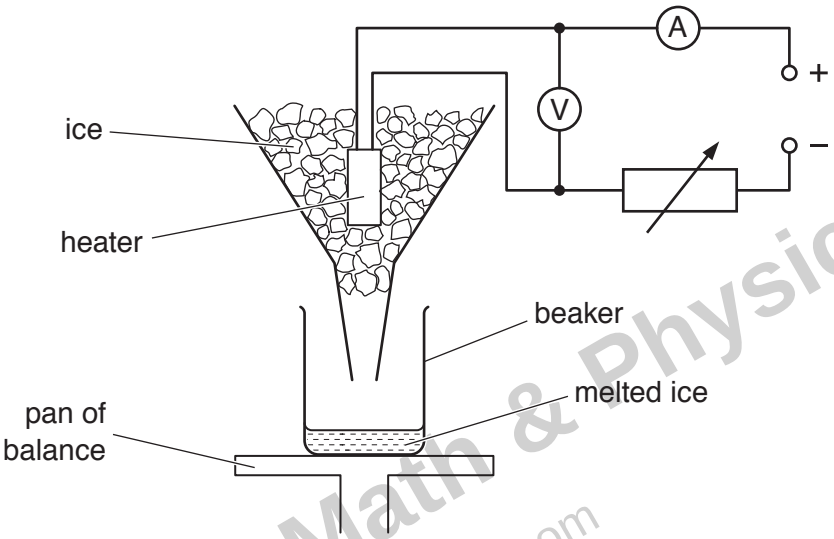

Fig. 3.1

The balance reading measures the mass of the beaker and the melted ice (water) in the beaker.

The heater is switched on and pieces of ice at 0 °C are added continuously to the funnel so that the heater is always surrounded by ice.

When water drips out of the funnel at a constant rate, the balance reading is noted at 2.0 minute intervals. After 10 minutes, the current in the heater is increased and the balance readings are taken for a further 12 minutes.

Kambridge Math & Physics
kambridgemp.com

The variation with time of the balance reading is shown in Fig. 3.2.

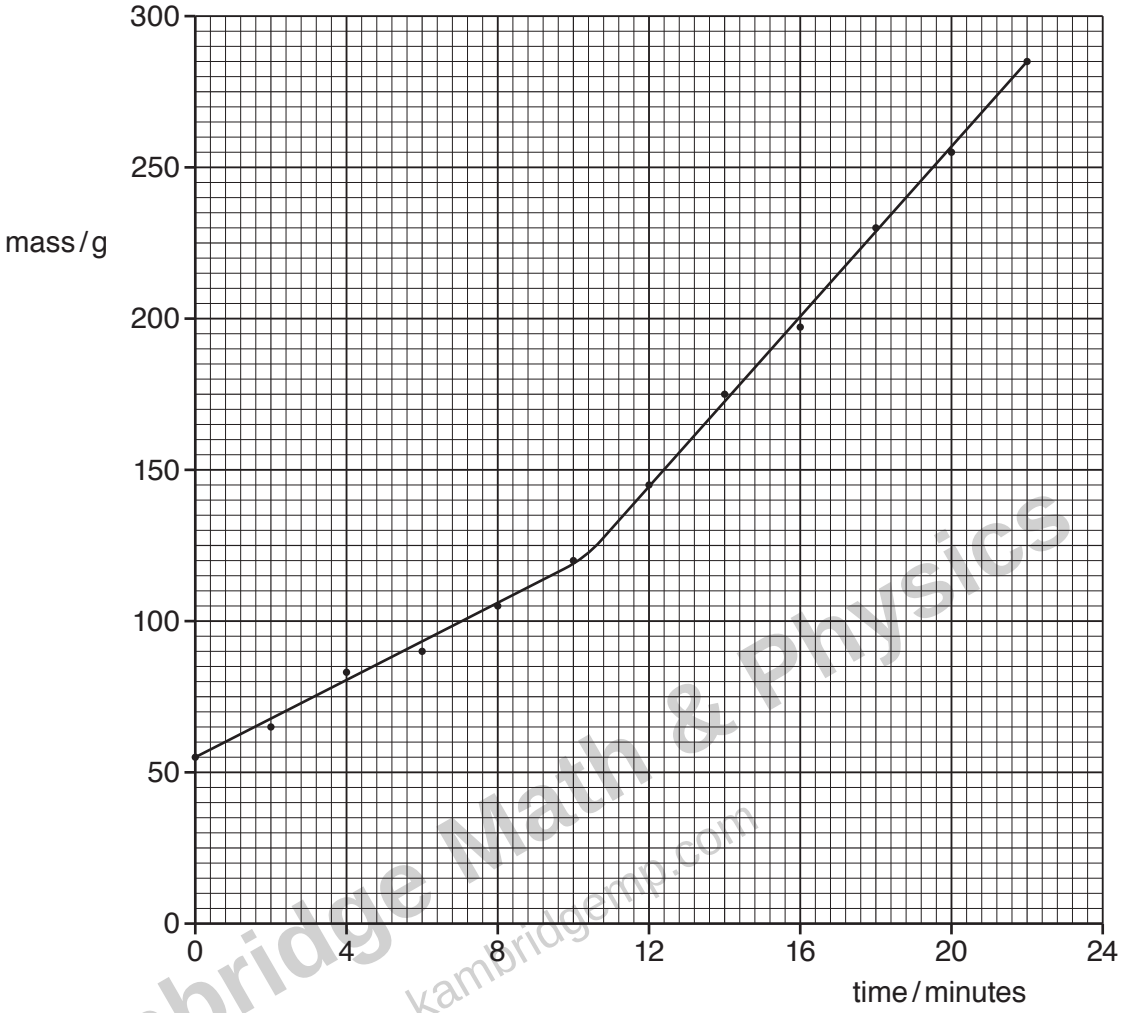

Kambridge Math & Physics
kambridgemp.com

Fig. 3.2

The readings of the ammeter and of the voltmeter are shown in Fig. 3.3.

	ammeter reading / A	voltmeter reading / V
from time 0 to time 10 minutes after time 10 minutes	1.8 3.6	7.3 15.1

Fig. 3.3

© UCLES 2019

(i) From time 0 to time 10.0 minutes, 65 g of ice is melted.

Use Fig. 3.2 to determine the mass of ice melted from time 12.0 minutes to time 22.0 minutes.

mass = ... g [1]

(ii) Explain why, although the power of the heater is changed, the rate at which thermal energy is transferred from the surroundings to the ice is constant.

.....

..... [1]

(iii) Determine a value for the specific latent heat of fusion L of ice.

Kambridge Math & Physics
kambridgemp.com

L = ... $J g^{-1}$ [4]

(iv) Calculate the rate at which thermal energy is transferred from the surroundings to the ice.

rate = ... W [2]

[Total: 10]

4 A ball of mass M is held on a horizontal surface by two identical extended springs, as illustrated in Fig. 4.1.

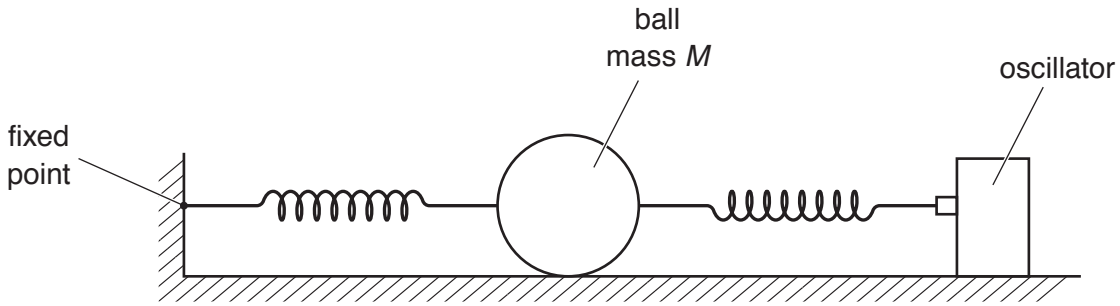

Fig. 4.1

One spring is attached to a fixed point. The other spring is attached to an oscillator.

The oscillator is switched off. The ball is displaced sideways along the axis of the springs and is then released. The variation with time t of the displacement x of the ball is shown in Fig. 4.2.

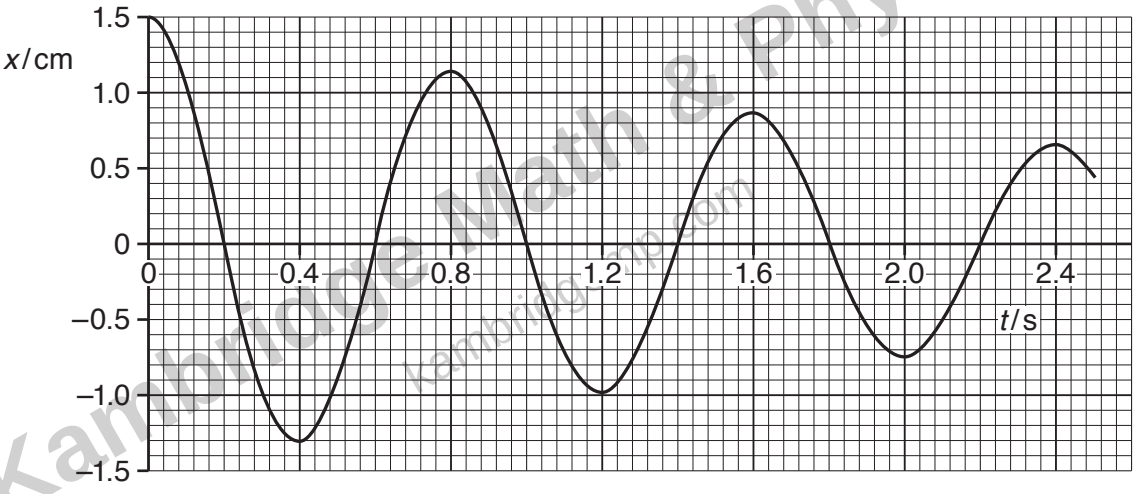

Cambridge Math & Physics
cambridgemp.com

Fig. 4.2

(a) State:

(i) what is meant by *damping*

.....

..... [1]

(ii) the evidence provided by Fig. 4.2 that the motion of the ball is damped.

.....

..... [1]

(b) The acceleration a and the displacement x of the ball are related by the expression

$$a = -\left(\frac{2k}{M}\right)x$$

where k is the spring constant of one of the springs.

The mass M of the ball is 1.2 kg.

(i) Use data from Fig. 4.2 to determine the angular frequency ω of the oscillations of the ball.

ω = ... rad s^{-1} [2]

(ii) Use your answer in **(i)** to determine the value of k.

Kambridge Math & Physics
kambridgemp.com

k = ... N m^{-1} [2]

(c) The oscillator is switched on. The amplitude of oscillation of the oscillator is constant.

The angular frequency of the oscillations is gradually increased from 0.7ω to 1.3ω, where ω is the angular frequency calculated in **(b)(i)**.

(i) On the axes of Fig. 4.3, show the variation with angular frequency of the amplitude *A* of oscillation of the ball.

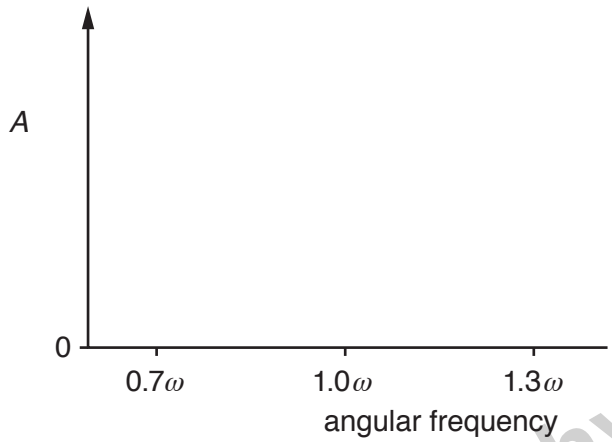

Fig. 4.3

[2]

(ii) Some sand is now sprinkled on the horizontal surface.

The angular frequency of the oscillations is again gradually increased from 0.7ω to 1.3ω.

State **two** changes that occur to the line you have drawn on Fig. 4.3.

1. .....

.....

2. .....

.....

[2]

[Total: 10]

Kambridge Math & Physics
kambridgemp.com

5 (a) (i) State what is meant by the *specific acoustic impedance* of a medium.

.....

.....

..... [2]

(ii) The density of a sample of bone is $1.8\,g\,cm^{-3}$ and the speed of ultrasound in the bone is $4.1 \times 10^{3}\,m\,s^{-1}$.

Calculate the specific acoustic impedance Z_B of the sample of bone.

Z_B = ... $kg\,m^{-2}\,s^{-1}$ [1]

Kambridge Math & Physics
kambridgemp.com

(b) A parallel beam of ultrasound passes normally through a layer of fat and of muscle, as illustrated in Fig. 5.1.

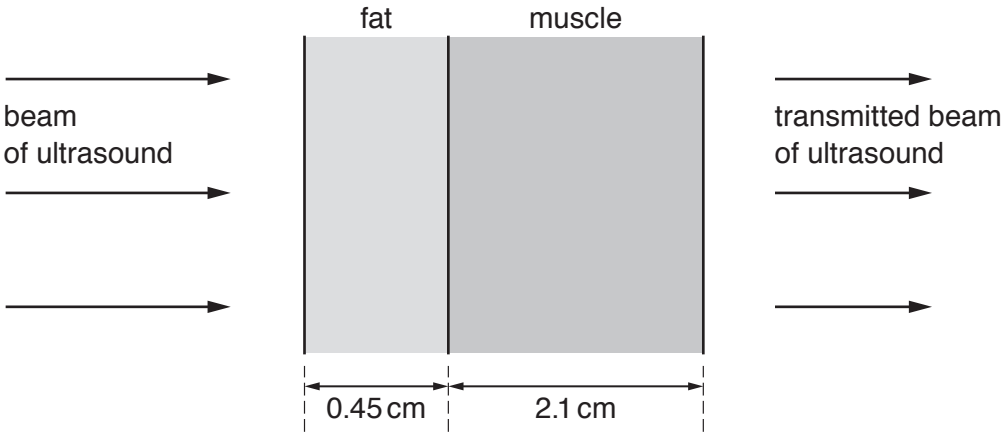

Fig. 5.1 (not to scale)

The fat has thickness 0.45 cm and the muscle has thickness 2.1 cm.

Data for fat and for muscle are given in Fig. 5.2.

	specific acoustic impedance $Z / 10^6\,\text{kg m}^{-2}\,\text{s}^{-1}$	linear attenuation (absorption) coefficient μ / cm^{-1}
fat	1.3	0.24
muscle	1.7	0.23

Fig. 5.2

The intensity reflection coefficient α at a boundary between two media of specific acoustic impedances Z_1 and Z_2 is given by the expression

$$\alpha = \frac{(Z_2 - Z_1)^2}{(Z_2 + Z_1)^2}.$$

Calculate the fraction of the intensity of the ultrasound that is **transmitted** through the boundary between the fat and the muscle.

fraction transmitted = ... [1]

Kambridge Math & Physics
kambridgemp.com

(c) (i) State what is meant by *attenuation* of an ultrasound wave.

.....

.....

..... [2]

(ii) Data for linear attenuation coefficients are given in Fig. 5.2.

Determine the ratio

$$\frac{\text{intensity of ultrasound transmitted through the medium}}{\text{intensity of ultrasound entering the medium}}$$

for:

1. the layer of fat of thickness 0.45 cm

ratio = ...

2. the layer of muscle of thickness 2.1 cm.

ratio = ...
[3]

(d) Use your answers in **(b)** and **(c)(ii)** to determine the fraction of the intensity entering the layer of fat that is transmitted through the layer of muscle.

fraction transmitted = ... [1]

[Total: 10]

Kambridge Math & Physics
kambridgemp.com

6 The variation with time of the displacement of an amplitude-modulated (AM) wave is shown in Fig. 6.1.

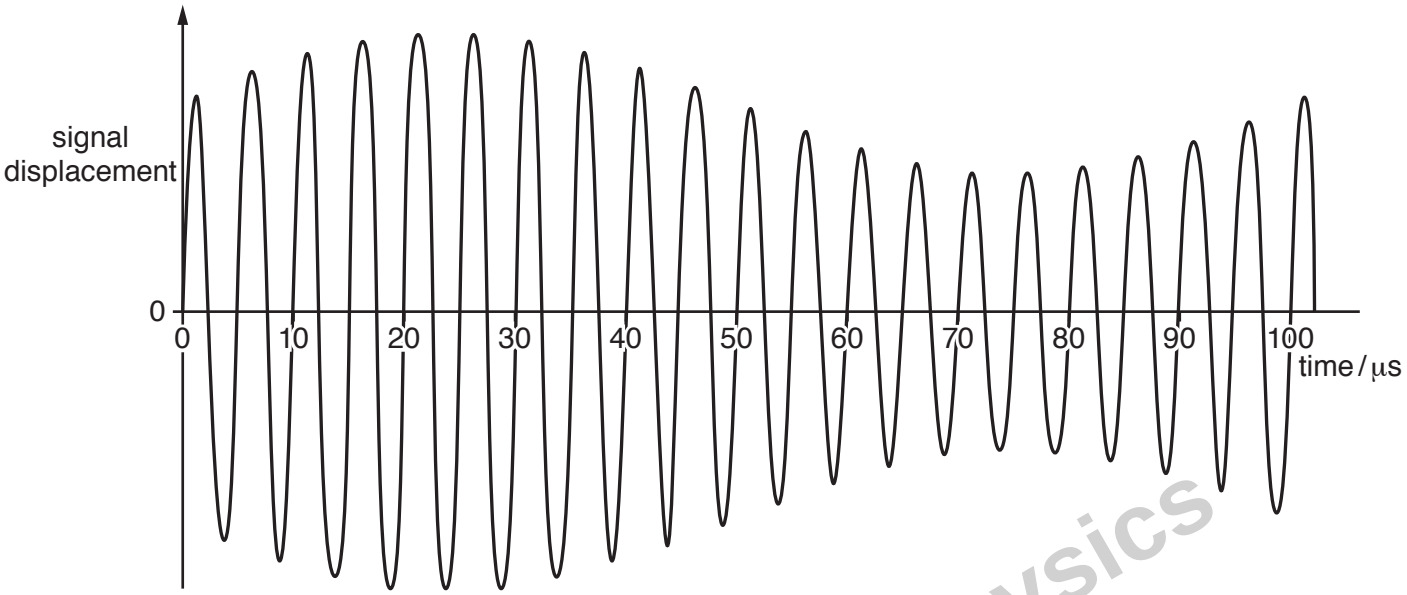

Fig. 6.1

The sinusoidal information signal has frequency 10 kHz.

(a) Determine the frequency of the carrier wave.

frequency = ... Hz [1]

(b) On the axes of Fig. 6.2, sketch the frequency spectrum of the modulated wave.

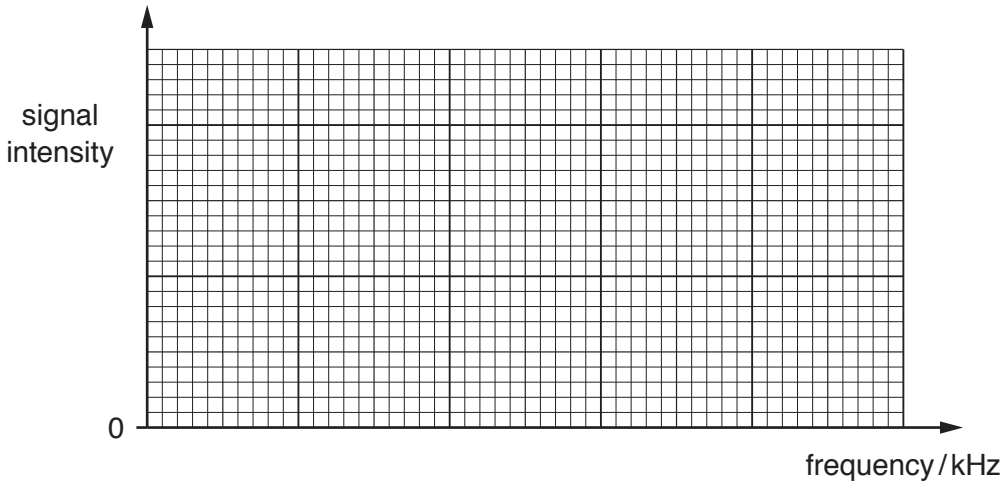

Fig. 6.2

[3]

[Total: 4]

Kambridge Math & Physics
kambridgemp.com

7 Describe the principles of computed tomography (CT) scanning.

.....

.....

.....

.....

.....

.....

.....

..... [5]

Kambridge Math & Physics
kambridgemp.com

8 Electrons enter a rectangular slice PQRSEFGH of a semiconductor material at right-angles to face PQFE, as shown in Fig. 8.1.

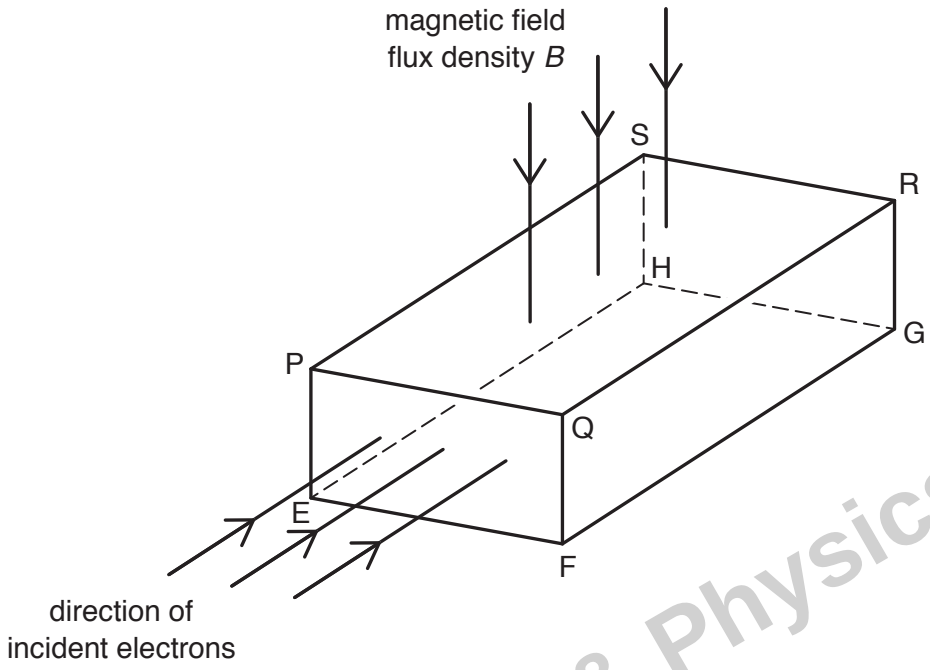

Fig. 8.1

A uniform magnetic field of flux density B is directed into the slice, at right-angles to face PQRS.

(a) The electrons each have charge $-q$ and drift speed v in the slice.

State the magnitude and the direction of the force due to the magnetic field on each electron as it enters the slice.

.....

.....

..... [2]

(b) The force on the electrons causes a voltage V_H to be established across the semiconductor slice given by the expression

$$V_H = \frac{BI}{ntq}$$

where I is the current in the slice.

(i) State the two faces between which the voltage V_H is established.

face ..... and face ..... [1]

(ii) Use letters from Fig. 8.1 to identify the distance t.

..... [1]

Kambridge Math & Physics
kambridgemp.com

(c) Aluminium ($^{27}_{13}Al$) has a density of 2.7 g cm^{-3}. Assume that there is one free electron available to carry charge per atom of aluminium.

(i) Show that the number of charge carriers per unit volume in aluminium is 6.0×10^{28} m^{-3}.

[2]

(ii) A sample of aluminium foil has a thickness of 0.090 mm. The current in the foil is 4.6 A.

A uniform magnetic field of flux density 0.15 T acts at right-angles to the foil.

Use the value in **(i)** to calculate the voltage V_H that is generated.

V_H = ... V [2]

[Total: 8]

Kambridge Math & Physics
kambridgemp.com

9 **(a)** Define what is meant by *electric potential* at a point.

.....

.....

..... [2]

(b) In an α-particle scattering experiment, α-particles are directed towards a thin film of gold, as illustrated in Fig. 9.1.

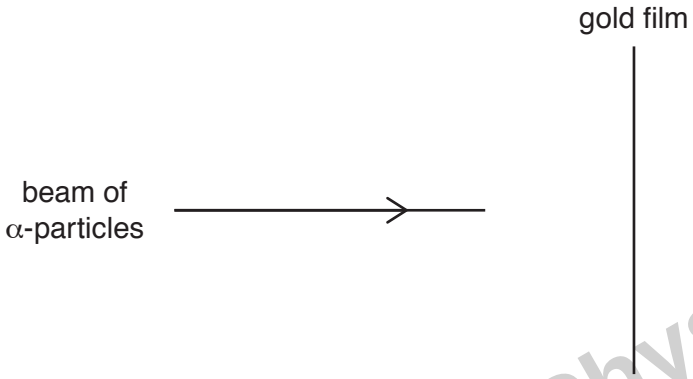

Fig. 9.1

The apparatus is in a vacuum.

The gold-197 ($^{197}_{79}$Au) nuclei in the film may be considered to be fixed point charges.

The α-particles emitted from the source each have an energy of 4.8 MeV.

Calculate:

(i) the initial kinetic energy E_K, in J, of an α-particle emitted from the source

E_K = ... J [1]

Kambridge Math & Physics
kambridgemp.com

(ii) the distance *d* of closest approach of an α-particle to a gold nucleus.

d = ... m [4]

(c) Use your answer in **(b)(ii)** to comment on the possible diameter of a gold nucleus.

.....

..... [1]

[Total: 8]

Kambridge Math & Physics
kambridgemp.com

BLANK PAGE

Kambridge Math & Physics
kambridgemp.com

10 (a) The upper electron energy bands in an intrinsic semiconductor material are illustrated in Fig. 10.1.

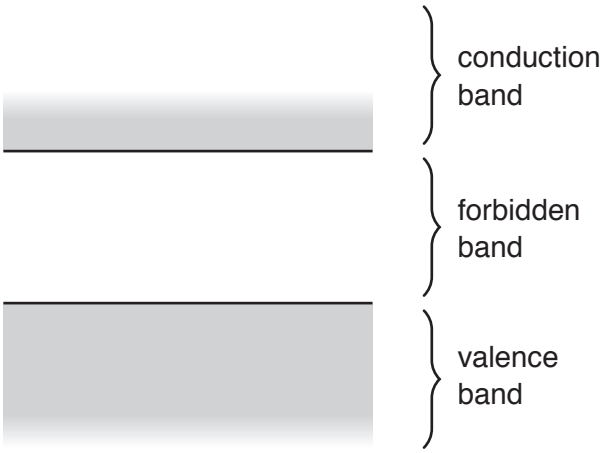

Fig. 10.1

Use band theory to explain why the resistance of an intrinsic semiconductor material decreases as its temperature increases.

.....

.....

.....

.....

.....

.....

.....

..... [4]

Kambridge Math & Physics
kambridgemp.com

(b) A comparator circuit incorporating an ideal operational amplifier (op-amp) is shown in Fig. 10.2.

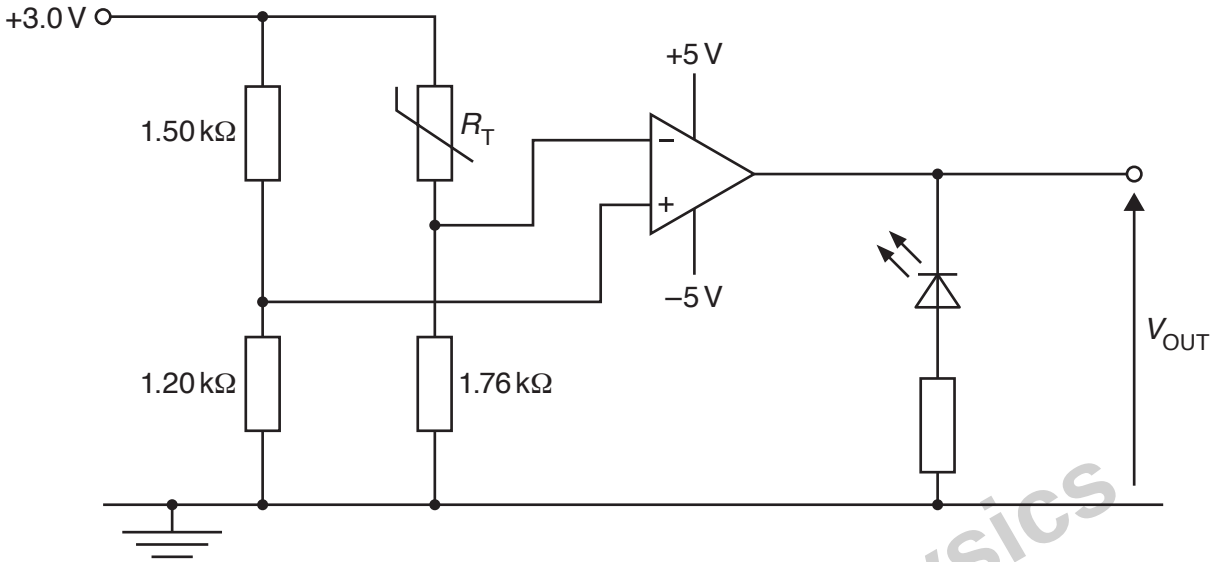

Fig. 10.2

The variation with temperature θ of the resistance R_T of the thermistor is shown in Fig. 10.3.

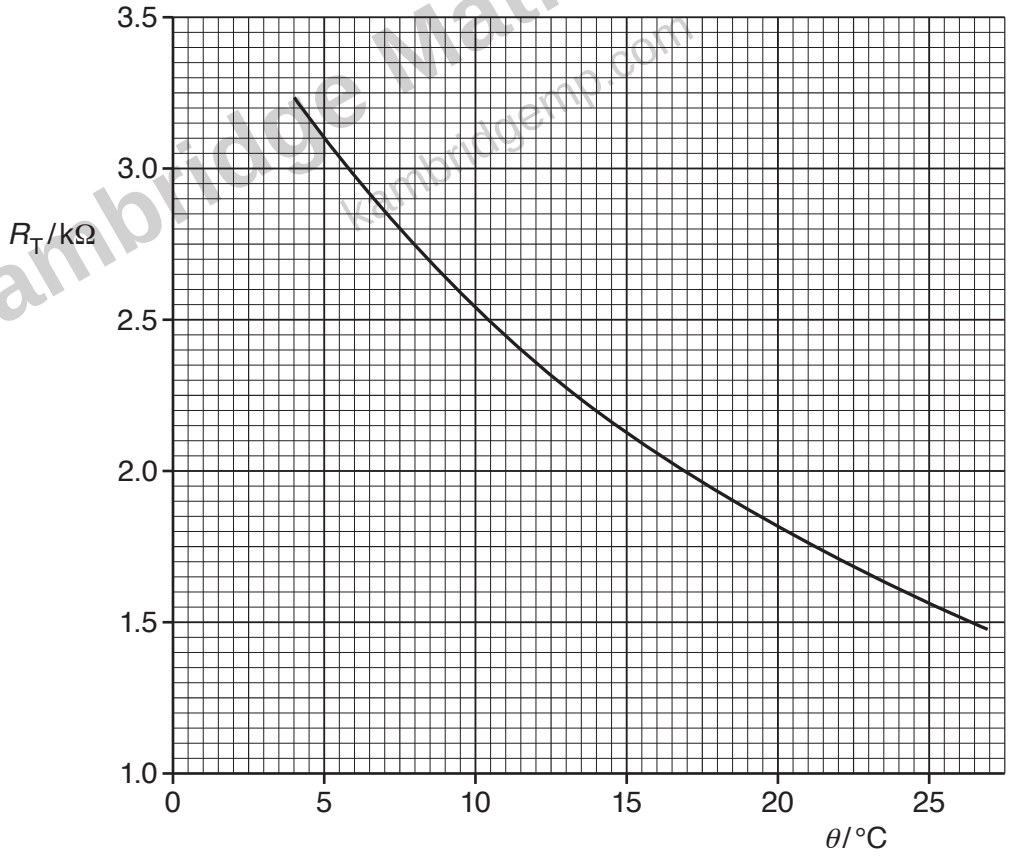

Fig. 10.3

Kambridge Math & Physics
kambridgemp.com

(i) Determine the temperature at which the light-emitting diode (LED) in Fig. 10.2 switches on or off.

temperature = ... °C [4]

(ii) State and explain whether the thermistor is above or below the temperature calculated in **(i)** for the LED to emit light.

.....

.....

.....

..... [3]

[Total: 11]

Kambridge Math & Physics
kambridgemp.com

11 **(a)** State Faraday's law of electromagnetic induction.

.....

.....

..... [2]

(b) A solenoid S has a small coil C placed near to one of its ends, as shown in Fig. 11.1.

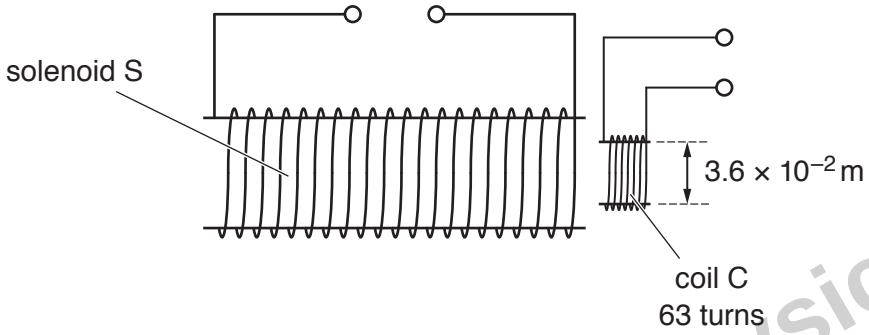

Fig. 11.1

Kambridge Math & Physics
kambridgemp.com

The coil C has a circular cross-section of diameter 3.6×10^{-2} m and contains 63 turns of wire.

The solenoid S produces a uniform magnetic field of flux density B, in tesla, in the region of coil C given by the expression

$$B = 9.4 \times 10^{-4} I$$

where I is the current, in ampere, in the solenoid S.

The variation with time t of the current I in solenoid S is shown in Fig. 11.2.

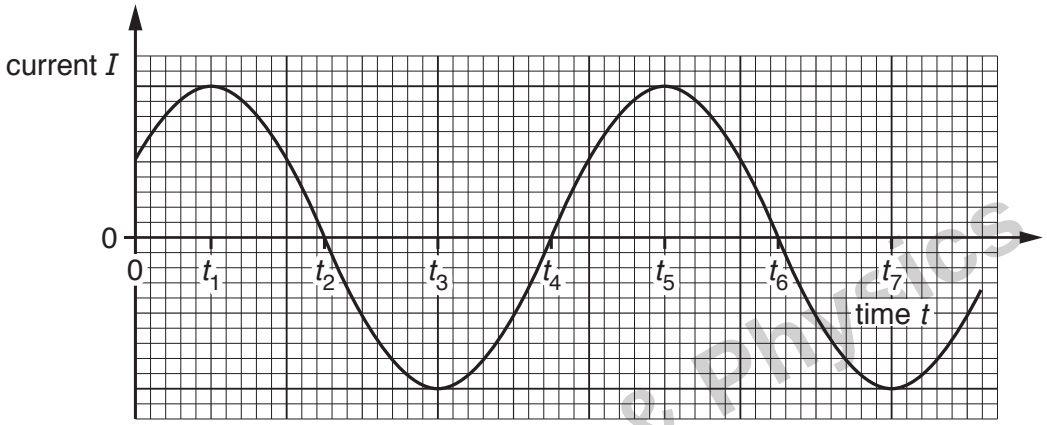

Fig. 11.2

State two times at which:

(i) there is no electromotive force (e.m.f.) induced in coil C

time ..... and time ..... [1]

(ii) the induced e.m.f. in coil C is a maximum but with opposite polarities.

time ..... and time ..... [1]

(c) The alternating current in the solenoid S in **(b)** is replaced by a constant current of 5.0 A.

Calculate the average e.m.f. induced in coil C when the current in solenoid S is reversed in a time of 6.0 ms.

e.m.f. induced = ... V [3]

[Total: 7]

Kambridge Math & Physics
kambridgemp.com

12 Radon-222 ($^{222}_{86}$Ra) is a radioactive gas that decays randomly with a decay constant of 7.55×10^{-3} hour^{-1}.

(a) State what is meant by:

(i) *random* decay

.....

..... [1]

(ii) *decay constant*.

.....

.....

..... [2]

(b) The activity of radon gas in a sample of $4.80 \times 10^{-3}\,m^3$ of air taken from a building is 0.600 Bq.

There are 2.52×10^{25} air molecules in a volume of $1.00\,m^3$ of air.

Calculate, for $1.00\,m^3$ of the air, the ratio

$$\frac{\text{number of air molecules}}{\text{number of radon atoms}}.$$

Kambridge Math & Physics
kambridgemp.com

ratio = ... [5]

[Total: 8]

Permission to reproduce items where third-party owned material protected by copyright is included has been sought and cleared where possible. Every reasonable effort has been made by the publisher (UCLES) to trace copyright holders, but if any items requiring clearance have unwittingly been included, the publisher will be pleased to make amends at the earliest possible opportunity.

To avoid the issue of disclosure of answer-related information to candidates, all copyright acknowledgements are reproduced online in the Cambridge Assessment International Education Copyright Acknowledgements Booklet. This is produced for each series of examinations and is freely available to download at www.cambridgeinternational.org after the live examination series.

Cambridge Assessment International Education is part of the Cambridge Assessment Group. Cambridge Assessment is the brand name of the University of Cambridge Local Examinations Syndicate (UCLES), which itself is a department of the University of Cambridge.

© UCLES 2019