Cambridge Assessment International Education

Cambridge International AS & A Level

CANDIDATE NAME

CENTRE NUMBER

CANDIDATE NUMBER

4816219496

PHYSICS **9702/41**

Paper 4 A Level Structured Questions **May/June 2021**

2 hours

You must answer on the question paper.

No additional materials are needed.

INSTRUCTIONS

- Answer **all** questions.
- Use a black or dark blue pen. You may use an HB pencil for any diagrams or graphs.
- Write your name, centre number and candidate number in the boxes at the top of the page.
- Write your answer to each question in the space provided.
- Do **not** use an erasable pen or correction fluid.
- Do **not** write on any bar codes.
- You may use a calculator.
- You should show all your working and use appropriate units.

INFORMATION

- The total mark for this paper is 100.
- The number of marks for each question or part question is shown in brackets [ ].

Kambridge Math & Physics
kambridgemp.com

This document has **28** pages. Any blank pages are indicated.

© UCLES 2021

Data

speed of light in free space	$c = 3.00 \times 10^{8}\,\text{m s}^{-1}$
permeability of free space	$\mu_0 = 4\pi \times 10^{-7}\,\text{H m}^{-1}$
permittivity of free space	$\varepsilon_0 = 8.85 \times 10^{-12}\,\text{F m}^{-1}$
	$\left(\frac{1}{4\pi\varepsilon_0} = 8.99 \times 10^{9}\,\text{m F}^{-1}\right)$
elementary charge	$e = 1.60 \times 10^{-19}\,\text{C}$
the Planck constant	$h = 6.63 \times 10^{-34}\,\text{J s}$
unified atomic mass unit	$1\,\text{u} = 1.66 \times 10^{-27}\,\text{kg}$
rest mass of electron	$m_e = 9.11 \times 10^{-31}\,\text{kg}$
rest mass of proton	$m_p = 1.67 \times 10^{-27}\,\text{kg}$
molar gas constant	$R = 8.31\,\text{J K}^{-1}\,\text{mol}^{-1}$
the Avogadro constant	$N_A = 6.02 \times 10^{23}\,\text{mol}^{-1}$
the Boltzmann constant	$k = 1.38 \times 10^{-23}\,\text{J K}^{-1}$
gravitational constant	$G = 6.67 \times 10^{-11}\,\text{N m}^2\,\text{kg}^{-2}$
acceleration of free fall	$g = 9.81\,\text{m s}^{-2}$

Kambridge Math & Physics
kambridgemp.com

Formulae

uniformly accelerated motion	$s = ut + \frac{1}{2}at^2$ $v^2 = u^2 + 2as$
work done on/by a gas	$W = p\Delta V$
gravitational potential	$\phi = -\frac{Gm}{r}$
hydrostatic pressure	$p = \rho gh$
pressure of an ideal gas	$p = \frac{1}{3}\frac{Nm}{V}\langle c^2 \rangle$
simple harmonic motion	$a = -\omega^2 x$
velocity of particle in s.h.m.	$v = v_0 \cos \omega t$ $v = \pm \omega\sqrt{(x_0^2 - x^2)}$
Doppler effect	$f_o = \frac{f_s v}{v \pm v_s}$
electric potential	$V = \frac{Q}{4\pi\varepsilon_0 r}$
capacitors in series	$1/C = 1/C_1 + 1/C_2 + \ldots$
capacitors in parallel	$C = C_1 + C_2 + \ldots$
energy of charged capacitor	$W = \frac{1}{2}QV$
electric current	$I = Anvq$
resistors in series	$R = R_1 + R_2 + \ldots$
resistors in parallel	$1/R = 1/R_1 + 1/R_2 + \ldots$
Hall voltage	$V_H = \frac{BI}{ntq}$
alternating current/voltage	$x = x_0 \sin \omega t$
radioactive decay	$x = x_0 \exp(-\lambda t)$
decay constant	$\lambda = \frac{0.693}{t_{\frac{1}{2}}}$

Kambridge Math & Physics
kambridgemp.com

Answer **all** the questions in the spaces provided.

1 The Earth may be assumed to be an isolated uniform sphere with its mass of 6.0×10^{24} kg concentrated at its centre.

A satellite of mass 1200 kg is in a circular orbit about the Earth in the Earth's gravitational field. The period of the orbit is 94 minutes.

(a) Define *gravitational field strength*.

.....

..... [1]

(b) Calculate the radius of the orbit of the satellite.

radius = ... m [3]

(c) Rockets on the satellite are fired so that the satellite enters a different circular orbit that has a period of 150 minutes. The change in the mass of the satellite may be assumed to be negligible.

(i) Show that the radius of the new orbit is 9.4×10^{6} m.

[2]

(ii) State, with a reason, whether the gravitational potential energy of the satellite increases or decreases.

.....

..... [1]

Cambridge Math & Physics
cambridgemp.com

(iii) Determine the magnitude of the change in the gravitational potential energy of the satellite.

change in potential energy = ... J [3]

[Total: 10]

Kambridge Math & Physics
kambridgemp.com

2 An ideal gas is contained in a cylinder by means of a movable frictionless piston, as illustrated in Fig. 2.1.

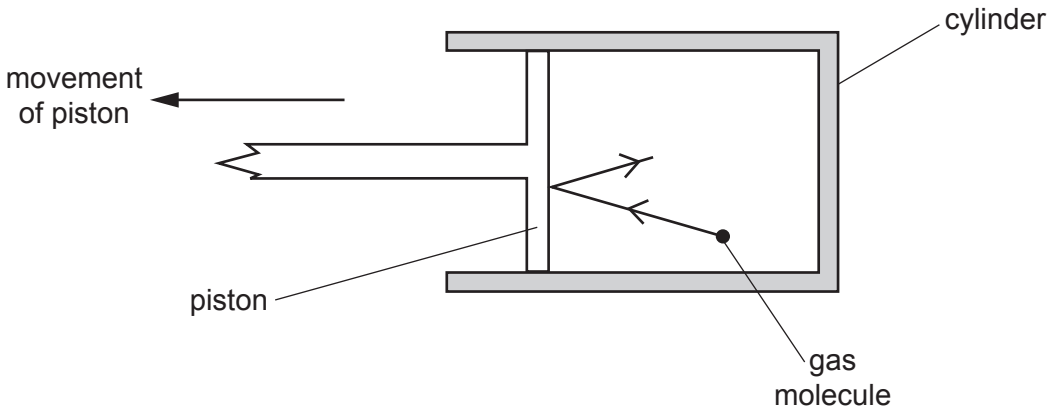

Fig. 2.1

Initially, the gas has a volume of $1.8 \times 10^{-3}\,m^3$ at a pressure of $3.3 \times 10^5\,Pa$ and a temperature of 310 K.

(a) Show that the number of gas molecules in the cylinder is 1.4×10^{23}.

[2]

(b) Use kinetic theory to explain why, when the piston is moved so that the gas expands, this causes a decrease in the temperature of the gas.

.....

.....

.....

..... [3]

Kambridge Math & Physics
kambridgemp.com

(c) The gas expands so that its volume increases to $2.4 \times 10^{-3}\,m^3$ at a pressure of $2.3 \times 10^5\,Pa$ and a temperature of 288 K, as shown in Fig. 2.2.

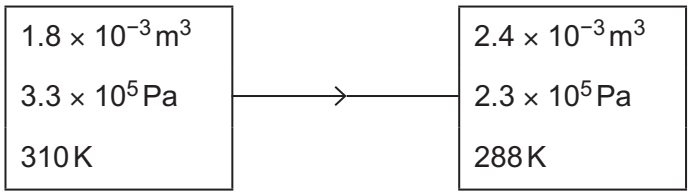

Fig. 2.2

(i) The average translational kinetic energy E_K of a molecule of an ideal gas is given by

$$E_K = \frac{3}{2}kT$$

where k is the Boltzmann constant and T is the thermodynamic temperature.

Calculate the increase in internal energy ΔU of the gas during the expansion.

ΔU = ... J [3]

(ii) The work done by the gas during the expansion is 76 J.

Use your answer in **(i)** to explain whether thermal energy is transferred to or from the gas during the expansion.

.....

.....

..... [2]

[Total: 10]

Kambridge Math & Physics
kambridgemp.com

3 **(a)** State what is meant by *simple harmonic motion*.

.....

.....

..... [2]

(b) A trolley of mass m is held on a horizontal surface by means of two springs. One spring is attached to a fixed point P. The other spring is connected to an oscillator, as shown in Fig. 3.1.

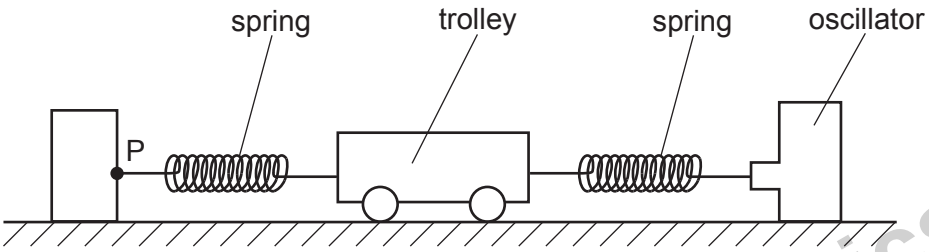

Fig. 3.1

The springs, each having spring constant k of 130 N m^{-1}, are always extended.

The oscillator is switched off. The trolley is displaced along the line of the springs and then released. The resulting oscillations of the trolley are simple harmonic.

The acceleration a of the trolley is given by the expression

$$a = -\left(\frac{2k}{m}\right)x$$

where x is the displacement of the trolley from its equilibrium position.

The mass of the trolley is 840 g.

Calculate the frequency f of oscillation of the trolley.

f = ... Hz [3]

Kambridge Math & Physics
kambridgemp.com

(c) The oscillator in **(b)** is switched on. The frequency of oscillation of the oscillator is varied, keeping its amplitude of oscillation constant.

The amplitude of oscillation of the trolley is seen to vary. The amplitude is a maximum at the frequency calculated in **(b)**.

(i) State the name of the effect giving rise to this maximum.

..... [1]

(ii) At any given frequency, the amplitude of oscillation of the trolley is constant.

Explain how this indicates that there are resistive forces opposing the motion of the trolley.

.....

.....

..... [2]

[Total: 8]

Kambridge Math & Physics
kambridgemp.com

BLANK PAGE

Kambridge Math & Physics
kambridgemp.com

4 Outline the **use** of ultrasound to obtain diagnostic information about internal body structures.

.....

.....

.....

.....

.....

.....

.....

.....

.....

..... [5]

Kambridge Math & Physics
kambridgemp.com

5 **(a)** State what is meant by the *amplitude modulation* (*AM*) of a radio wave.

.....

.....

..... [2]

(b) A radio wave is modulated by an audio signal.

The variation with frequency *f* of the amplitude of the modulated wave is shown in Fig. 5.1.

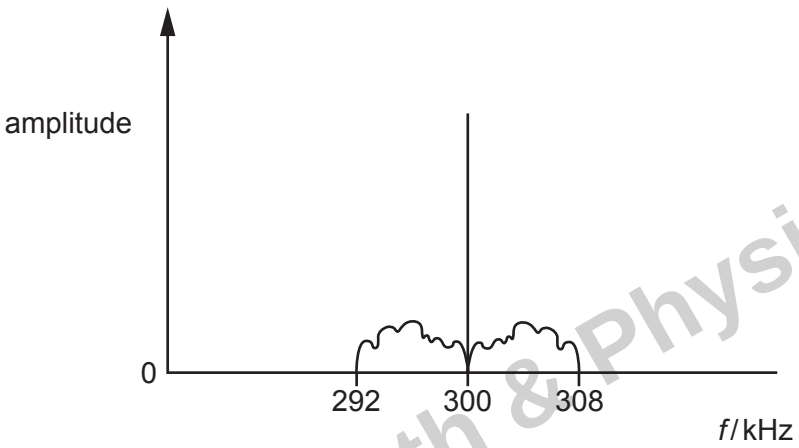

Fig. 5.1

Kambridge Math & Physics
kambridgemp.com

Determine:

(i) the wavelength of the carrier wave

wavelength = ... m [1]

(ii) the bandwidth of the modulated wave

bandwidth = ... kHz [1]

(iii) the maximum frequency of the audio signal.

maximum frequency = ... kHz [1]

(c) The power of a radio signal at a transmitter is P_T.
At a receiver, the received power P_R is given by the expression

$$P_R = \frac{0.082 P_T}{x^2}$$

where x is the distance, in metres, between the transmitter and the receiver.

For the transmission of this signal, the attenuation is 73 dB.

Determine the distance x.

x = ... m [3]

[Total: 8]

Kambridge Math & Physics
kambridgemp.com

6 **(a)** An isolated metal sphere of radius r is charged so that the electric field strength at its surface is E_0.

On Fig. 6.1, sketch the variation of the electric field strength E with distance x from the centre of the sphere. Your sketch should extend from $x = 0$ to $x = 3r$.

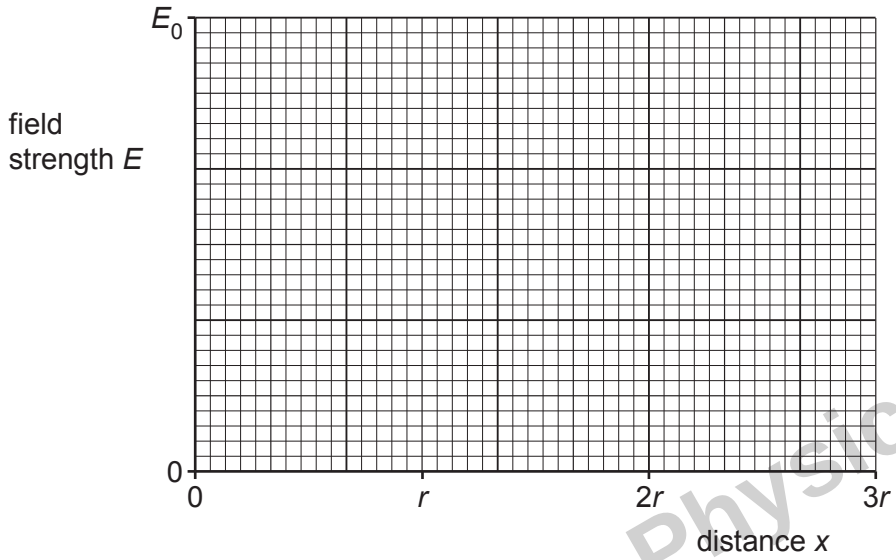

Fig. 6.1

[3]

(b) The de Broglie wavelength of a particle is λ_0 when its momentum is p_0.

On Fig. 6.2, sketch the variation with momentum p of the de Broglie wavelength λ of the particle for values of momentum from $\frac{p_0}{2}$ to p_0.

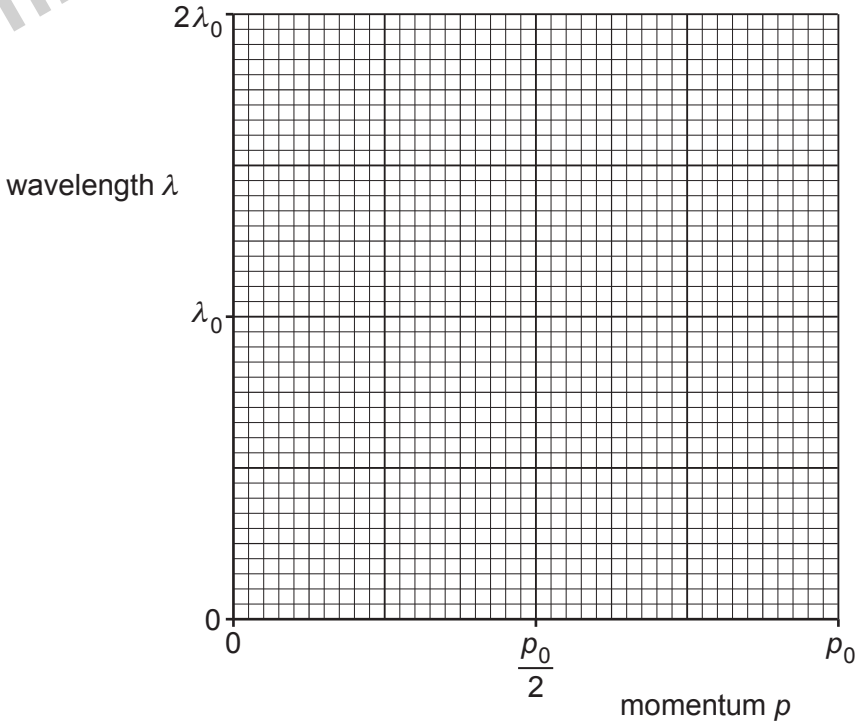

Fig. 6.2

[2]

Kambridge Math & Physics
kambridgemp.com

(c) A radioactive isotope decays with a half-life of 15 s to form a stable product.

A fresh sample of the radioactive isotope at time $t = 0$ contains N_0 nuclei and no nuclei of the stable product.

On Fig. 6.3, sketch the variation with t of the number n of nuclei of the stable product for time $t = 0$ to time $t = 45$ s.

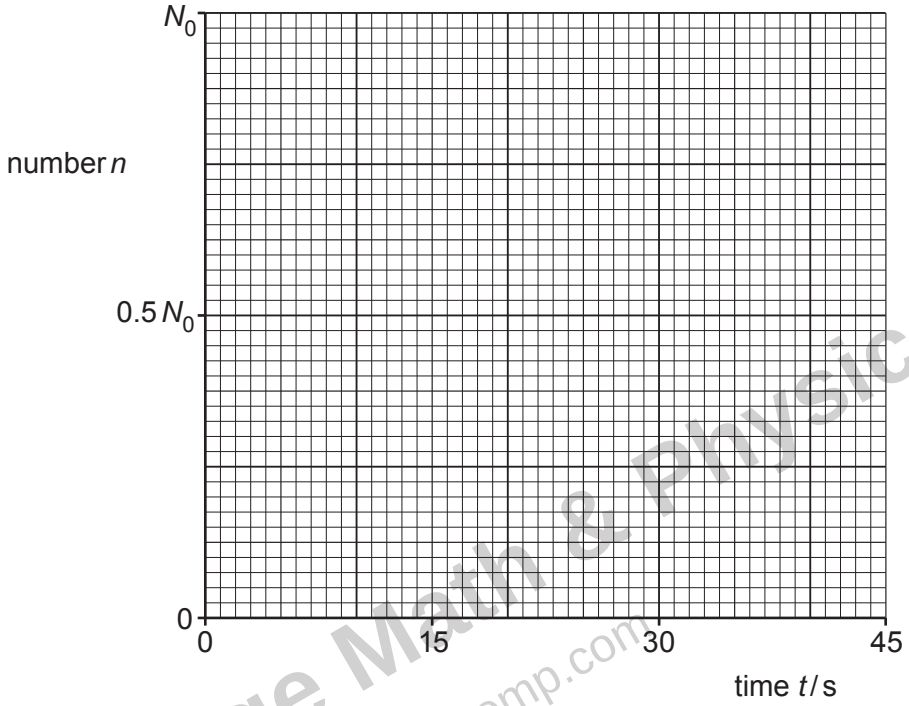

Fig. 6.3

[3]

[Total: 8]

Kambridge Math & Physics
kambridgemp.com

7 **(a)** State what is meant by the *capacitance* of a parallel plate capacitor.

.....

.....

..... [2]

(b) A capacitor of capacitance C is connected into the circuit shown in Fig. 7.1.

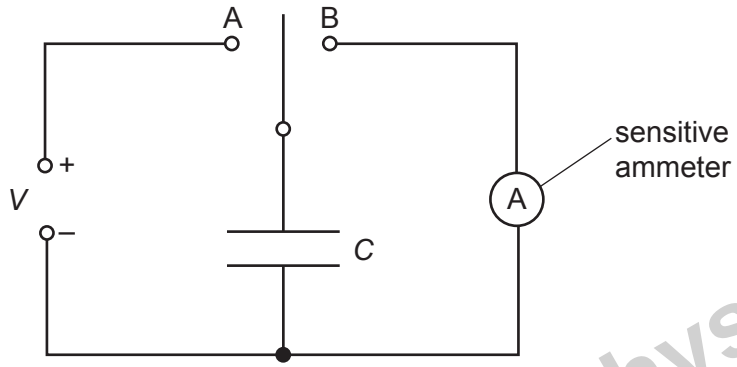

Fig. 7.1

When the two-way switch is in position A, the capacitor is charged so that the potential difference across it is V.
The switch moves to position B and the capacitor fully discharges through the sensitive ammeter.

The switch moves repeatedly between A and B so that the capacitor charges and then discharges with frequency f.

(i) Show that the average current I in the ammeter is given by the expression

$$I = fCV.$$

[2]

Kambridge Math & Physics
kambridgemp.com

(ii) For a potential difference V of 150 V and a frequency f of 60 Hz, the average current in the ammeter is 4.8 μA.

Calculate the capacitance, in pF, of the capacitor.

capacitance = ... pF [2]

(c) A second capacitor, having the same capacitance as the capacitor in **(b)**, is connected into the circuit of Fig. 7.1. The two capacitors are connected in series.

State and explain the new reading on the ammeter.

new reading = ... μA

.....

.....

..... [3]

[Total: 9]

Kambridge Math & Physics
kambridgemp.com

8 The variation with temperature of the resistance of a thermistor is shown in Fig. 8.1.

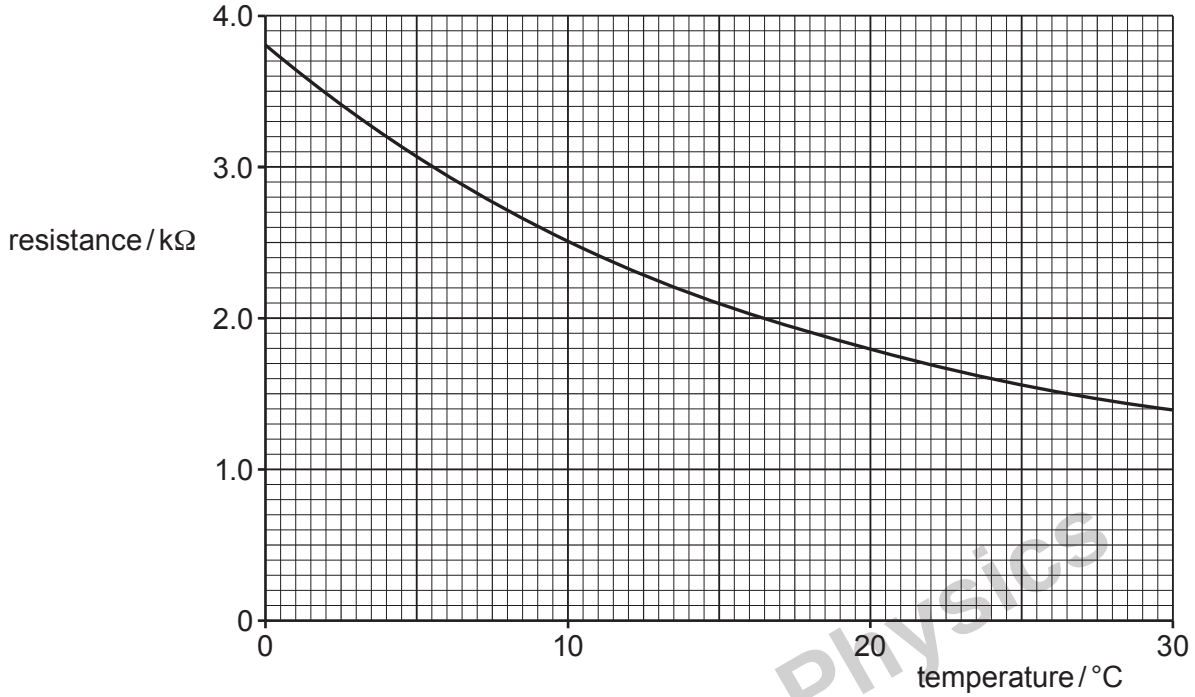

Fig. 8.1

A student includes the thermistor and an ideal operational amplifier (op-amp) in the circuit of Fig. 8.2.

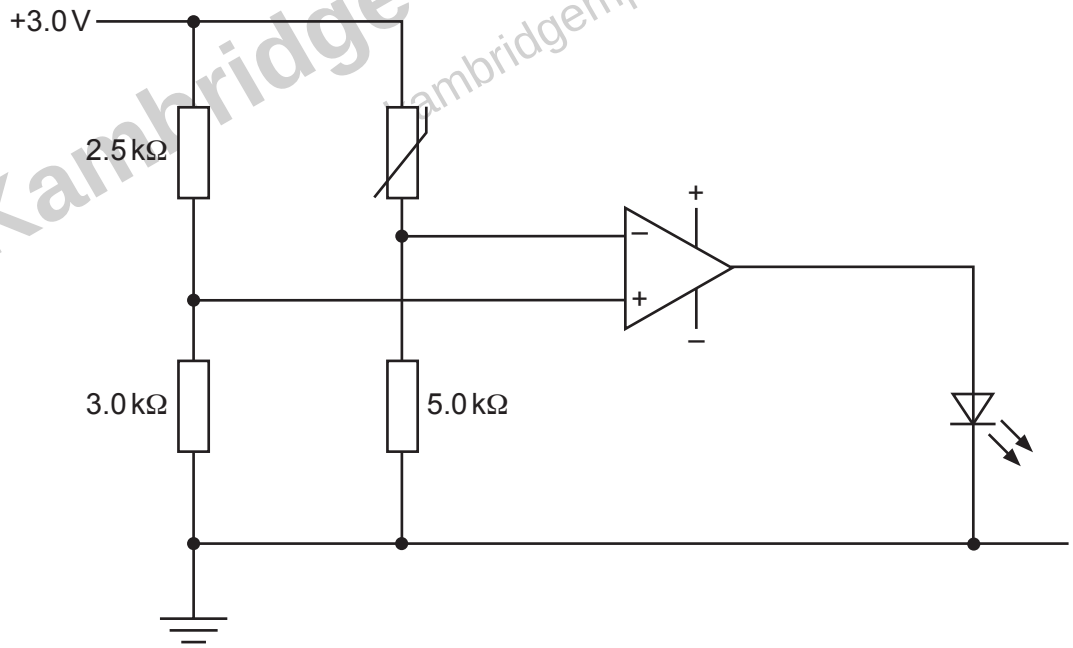

Fig. 8.2

Kambridge Math & Physics
kambridgemp.com

(a) Calculate the potential V^+ at the non-inverting input of the op-amp.

V^+ = ... V [2]

(b) At 10 °C, the resistance of the thermistor is 2.5 kΩ.

State and explain whether the light-emitting diode (LED) is emitting light.

.....

.....

..... [2]

(c) Explain why the student's circuit will not indicate any change in temperature above 0 °C.

.....

.....

..... [2]

(d) The resistor of resistance 5.0 kΩ is changed to a resistor of resistance R so that the LED switches on or off at a temperature of 20 °C.

Determine R in kΩ.

R = ... kΩ [3]

[Total: 9]

Kambridge Math & Physics
kambridgemp.com

9 **(a)** State what is meant by a *magnetic field*.

.....

.....

..... [2]

(b) A rectangular piece of aluminium foil is situated in a uniform magnetic field of flux density *B*, as shown in Fig. 9.1.

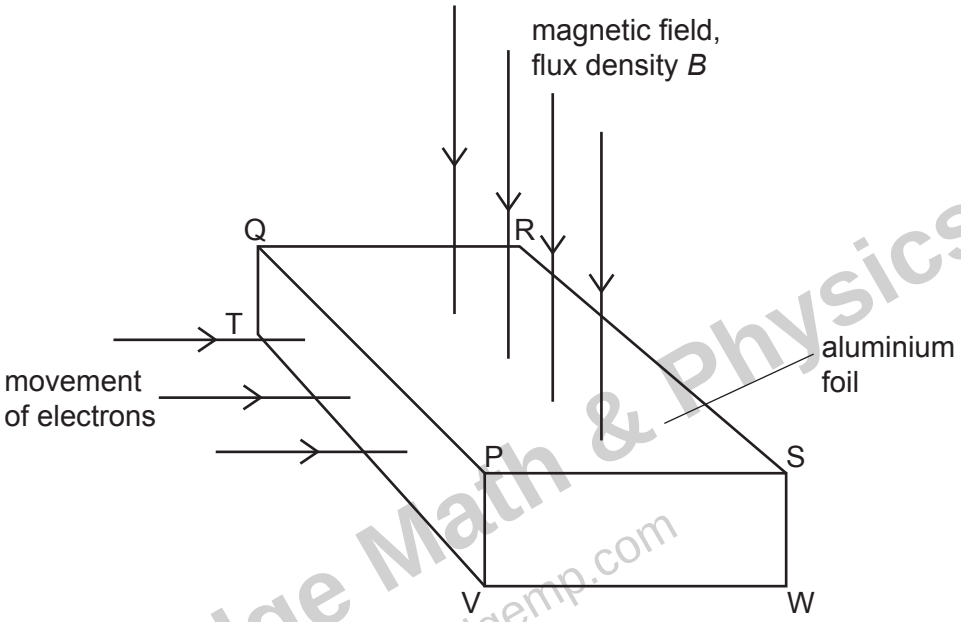

Fig. 9.1

Kambridge Math & Physics
kambridgemp.com

The magnetic field is normal to the face PQRS of the foil.

Electrons, each of charge $-q$, enter the foil at right angles to the face PQTV.

(i) On Fig. 9.1, shade the face of the foil on which electrons initially accumulate. [1]

(ii) Explain why electrons do not continuously accumulate on the face you have shaded.

.....

.....

.....

..... [3]

(c) The Hall voltage V_H developed across the foil in **(b)** is given by the expression

$$V_H = \frac{BI}{ntq}$$

where I is the current in the foil.

(i) State the meaning of the quantity n.

.....

..... [1]

(ii) Using the letters on Fig. 9.1, identify the distance t.

..... [1]

(d) Suggest why, in practice, Hall probes are usually made using a semiconductor material rather than a metal.

.....

..... [1]

[Total: 9]

Kambridge Math & Physics
kambridgemp.com

10 (a) State Lenz's law.

.....

.....

..... [2]

(b) A metal ring is suspended from a fixed point P by means of a thread, as shown in Fig. 10.1.

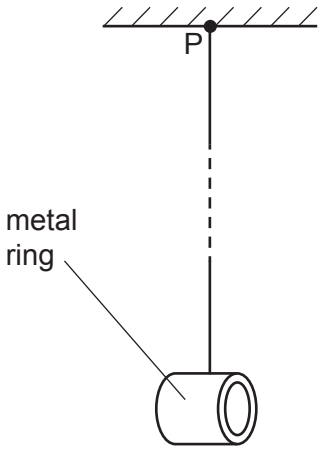

Fig. 10.1

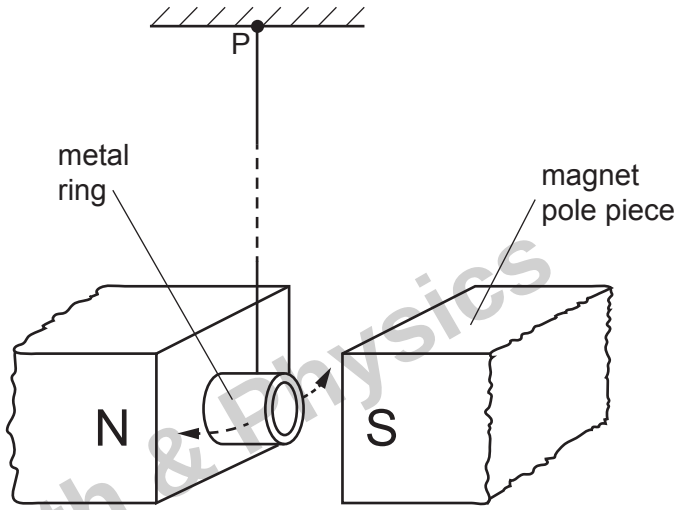

Fig. 10.2

The ring is displaced a distance *d* and then released. The ring completes many oscillations before coming to rest.

The poles of a magnet are now placed near to the ring so that the ring hangs midway between the poles of the magnet, as shown in Fig. 10.2.

The ring is again displaced a distance *d* and then released.
Explain why the ring completes fewer oscillations before coming to rest.

.....

.....

.....

.....

.....

..... [4]

Kambridge Math & Physics
(cambridgemp.com)

(c) The ring in **(b)** is now cut so that it has the shape shown in Fig. 10.3.



Fig. 10.3

Explain why, when the procedure in **(b)** is repeated, the cut ring completes more oscillations than the complete ring when oscillating between the poles of the magnet.

.....

.....

.....

.....

..... [3]

[Total: 9]

Kambridge Math & Physics
kambridgemp.com

11 **(a)** State how, in a modern X-ray tube, the intensity of the X-ray beam and its hardness are controlled.

intensity: .....

.....

hardness: .....

.....

[2]

(b) A model of a limb consists of soft tissue and bone, as illustrated in Fig. 11.1.

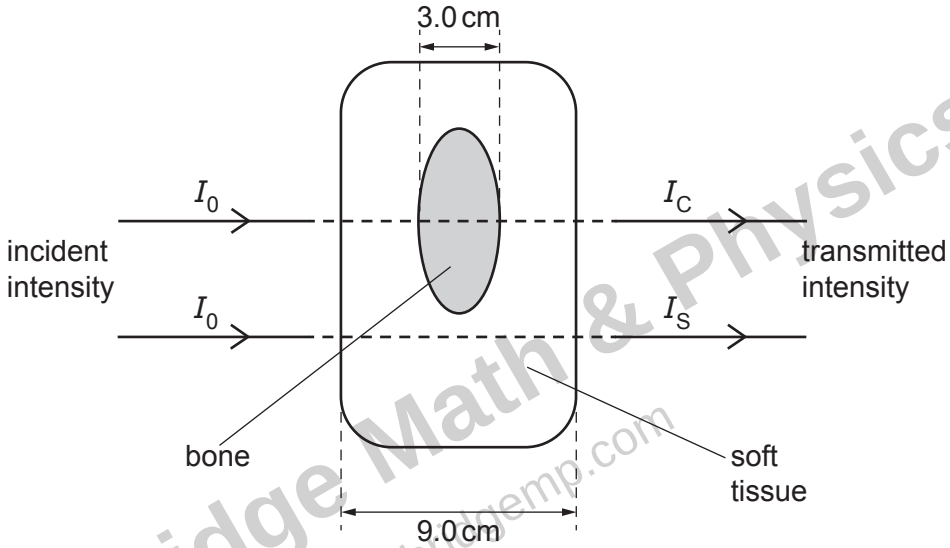

Fig. 11.1

Kembridge Math & Physics
kambridgemp.com

The soft tissue has a thickness of 9.0 cm. The bone within the soft tissue has a thickness of 3.0 cm.

Data for the linear attenuation (absorption) coefficient μ of X-rays in soft tissue and in bone are shown in Table 11.1.

Table 11.1

	μ / cm^{-1}
soft tissue	0.92
bone	2.9

A parallel beam of X-rays of intensity I_0 is incident normally on the model.

Calculate, in terms of I_0:

(i) the transmitted intensity I_S through soft tissue alone

I_S = ... I_0 [2]

(ii) the transmitted intensity I_C through soft tissue and bone.

I_C = ... I_0 [2]

(c) By reference to your answers in **(b)**, suggest, with a reason, whether good contrast on an X-ray image would be obtained.

.....

..... [1]

[Total: 7]

Kambridge Math & Physics
kambridgemp.com

BLANK PAGE

Kambridge Math & Physics
kambridgemp.com

12 **(a)** Electromagnetic radiation of a single constant frequency is incident on a metal surface. This causes an electron to be emitted.

Explain why the maximum kinetic energy of the electron is independent of the intensity of the incident radiation.

.....

.....

.....

.....

..... [3]

(b) Ultraviolet radiation of wavelength 250 nm is incident on the surface of a sheet of zinc. The maximum kinetic energy of the emitted electrons is 1.4 eV.

Determine, in eV:

(i) the energy of a photon of the ultraviolet radiation

energy = ... eV [3]

(ii) the work function energy of the surface of the zinc.

energy = ... eV [2]

[Total: 8]

Kambridge Math & Physics
kambridgemp.com

BLANK PAGE

Kambridge Math & Physics
kambridgemp.com

Permission to reproduce items where third-party owned material protected by copyright is included has been sought and cleared where possible. Every reasonable effort has been made by the publisher (UCLES) to trace copyright holders, but if any items requiring clearance have unwittingly been included, the publisher will be pleased to make amends at the earliest possible opportunity.

To avoid the issue of disclosure of answer-related information to candidates, all copyright acknowledgements are reproduced online in the Cambridge Assessment International Education Copyright Acknowledgements Booklet. This is produced for each series of examinations and is freely available to download at www.cambridgeinternational.org after the live examination series.

Cambridge Assessment International Education is part of the Cambridge Assessment Group. Cambridge Assessment is the brand name of the University of Cambridge Local Examinations Syndicate (UCLES), which itself is a department of the University of Cambridge.