Cambridge Assessment International Education

Cambridge International AS & A Level

CANDIDATE NAME

CENTRE NUMBER

CANDIDATE NUMBER

8983458344

PHYSICS **9702/42**

Paper 4 A Level Structured Questions **February/March 2020**

2 hours

You must answer on the question paper.

No additional materials are needed.

INSTRUCTIONS

- Answer **all** questions.
- Use a black or dark blue pen. You may use an HB pencil for any diagrams or graphs.
- Write your name, centre number and candidate number in the boxes at the top of the page.
- Write your answer to each question in the space provided.
- Do **not** use an erasable pen or correction fluid.
- Do **not** write on any bar codes.
- You may use a calculator.
- You should show all your working and use appropriate units.

INFORMATION

- The total mark for this paper is 100.
- The number of marks for each question or part question is shown in brackets [ ].

Kambridge Math & Physics
kambridgemp.com

This document has **28** pages. Blank pages are indicated.

© UCLES 2020

Data

speed of light in free space	$c = 3.00 \times 10^{8}\,\text{m s}^{-1}$
permeability of free space	$\mu_0 = 4\pi \times 10^{-7}\,\text{H m}^{-1}$
permittivity of free space	$\varepsilon_0 = 8.85 \times 10^{-12}\,\text{F m}^{-1}$
	$(\frac{1}{4\pi\varepsilon_0} = 8.99 \times 10^{9}\,\text{m F}^{-1})$
elementary charge	$e = 1.60 \times 10^{-19}\,\text{C}$
the Planck constant	$h = 6.63 \times 10^{-34}\,\text{J s}$
unified atomic mass unit	$1\,\text{u} = 1.66 \times 10^{-27}\,\text{kg}$
rest mass of electron	$m_e = 9.11 \times 10^{-31}\,\text{kg}$
rest mass of proton	$m_p = 1.67 \times 10^{-27}\,\text{kg}$
molar gas constant	$R = 8.31\,\text{J K}^{-1}\,\text{mol}^{-1}$
the Avogadro constant	$N_A = 6.02 \times 10^{23}\,\text{mol}^{-1}$
the Boltzmann constant	$k = 1.38 \times 10^{-23}\,\text{J K}^{-1}$
gravitational constant	$G = 6.67 \times 10^{-11}\,\text{N m}^2\,\text{kg}^{-2}$
acceleration of free fall	$g = 9.81\,\text{m s}^{-2}$

Kambridge Math & Physics
kambridgemp.com

Formulae

uniformly accelerated motion	$s = ut + \frac{1}{2}at^2$ $v^2 = u^2 + 2as$
work done on/by a gas	$W = p\Delta V$
gravitational potential	$\phi = -\frac{Gm}{r}$
hydrostatic pressure	$p = \rho gh$
pressure of an ideal gas	$p = \frac{1}{3}\frac{Nm}{V}\langle c^2 \rangle$
simple harmonic motion	$a = -\omega^2 x$
velocity of particle in s.h.m.	$v = v_0 \cos \omega t$ $v = \pm \omega \sqrt{(x_0^2 - x^2)}$
Doppler effect	$f_o = \frac{f_s v}{v \pm v_s}$
electric potential	$V = \frac{Q}{4\pi\varepsilon_0 r}$
capacitors in series	$1/C = 1/C_1 + 1/C_2 + \ldots$
capacitors in parallel	$C = C_1 + C_2 + \ldots$
energy of charged capacitor	$W = \frac{1}{2}QV$
electric current	$I = Anvq$
resistors in series	$R = R_1 + R_2 + \ldots$
resistors in parallel	$1/R = 1/R_1 + 1/R_2 + \ldots$
Hall voltage	$V_H = \frac{BI}{ntq}$
alternating current/voltage	$x = x_0 \sin \omega t$
radioactive decay	$x = x_0 \exp(-\lambda t)$
decay constant	$\lambda = \frac{0.693}{t_{\frac{1}{2}}}$

Kambridge Math & Physics
kambridgemp.com

Answer **all** the questions in the spaces provided.

1 **(a)** Define *gravitational potential* at a point.

.....

.....

..... [2]

(b) TESS is a satellite of mass 360 kg in a circular orbit about the Earth as shown in Fig. 1.1.

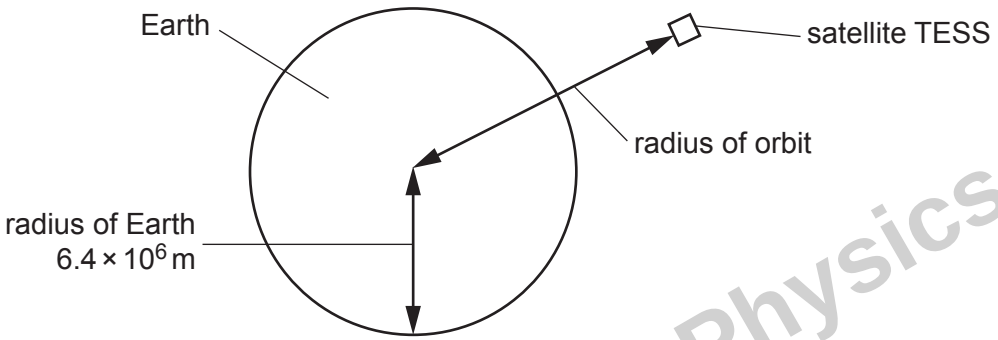

Fig. 1.1 (not to scale)

The radius of the Earth is 6.4×10^6 m and the mass of the Earth, considered to be a point mass at its centre, is 6.0×10^{24} kg.

(i) It takes TESS 13.7 days to orbit the Earth.

Show that the radius of orbit of TESS is 2.4×10^8 m.

[3]

Kambridge Math & Physics
kambridgemp.com

(ii) Calculate the change in gravitational potential energy between TESS in orbit and TESS on a launch pad on the surface of the Earth.

change in gravitational potential energy = ... J [3]

(iii) Use the information in **(b)(i)** to calculate the ratio:

$$\frac{\text{gravitational field strength on surface of Earth}}{\text{gravitational field strength at location of TESS in orbit}}.$$

ratio = ... [2]

[Total: 10]

Kambridge Math & Physics
kambridgemp.com

2 A large container of volume 85 m^3 is filled with 110 kg of an ideal gas. The pressure of the gas is 1.0×10^5 Pa at temperature T.

The mass of 1.0 mol of the gas is 32 g.

(a) Show that the temperature T of the gas is approximately 300 K.

[3]

(b) The temperature of the gas is increased to 350 K at constant volume. The specific heat capacity of the gas for this change is 0.66 $J\,kg^{-1}\,K^{-1}$.

Calculate the energy supplied to the gas by heating.

energy = ... J [2]

(c) Explain how movement of the gas molecules causes pressure in the container.

.....

.....

.....

.....

.....

.....

..... [3]

Kambridge Math & Physics
kambridgemp.com

(d) The temperature of a gas depends on the root-mean-square (r.m.s.) speed of its molecules.

Calculate the ratio:

$$\frac{\text{r.m.s. speed of gas molecules at } 350\,\text{K}}{\text{r.m.s. speed of gas molecules at } 300\,\text{K}}.$$

ratio = ... [2]

[Total: 10]

Kambridge Math & Physics
kambridgemp.com

3 **(a)** A body undergoes simple harmonic motion.

The variation with displacement x of its velocity v is shown in Fig. 3.1.

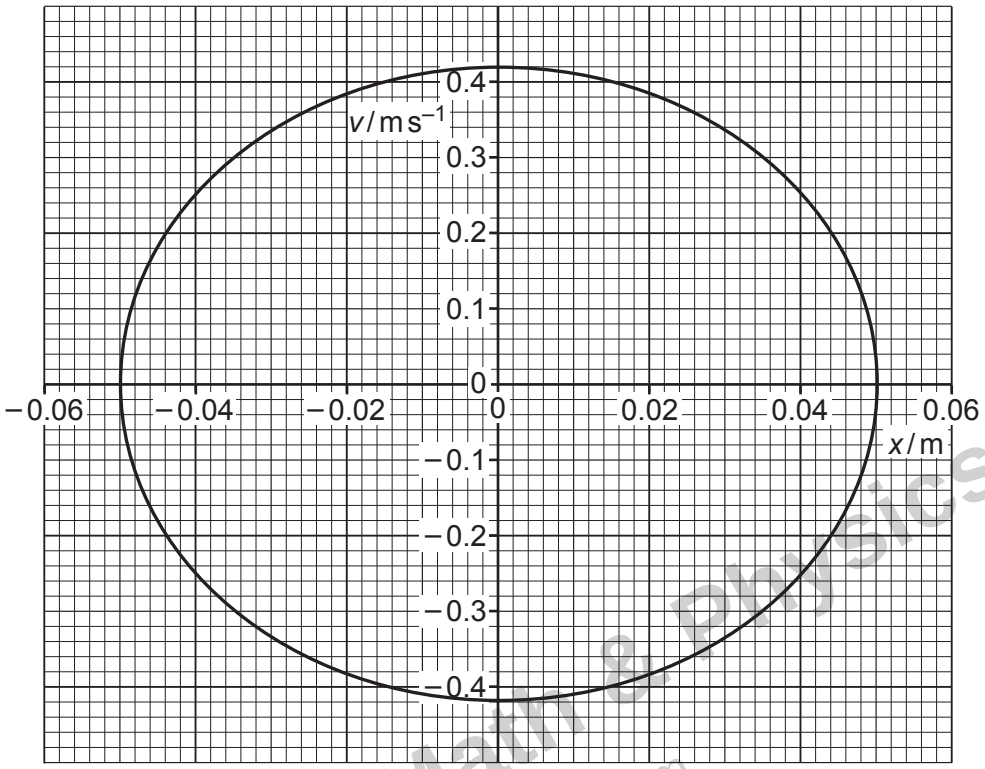

Fig. 3.1

(i) State the amplitude x_o of the oscillations.

x_o = ... m [1]

(ii) Calculate the period T of the oscillations.

T = ... s [3]

(iii) On Fig. 3.1, label with a P a point where the body has **maximum** potential energy. [1]

Kambridge Math & Physics
kambridgemp.com

(b) A bar magnet is suspended from the free end of a spring, as shown in Fig. 3.2.

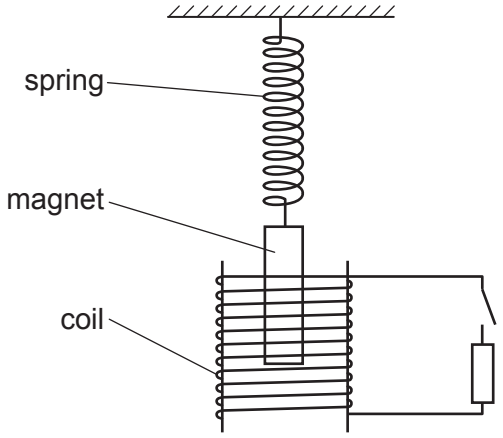

Fig. 3.2

One pole of the magnet is situated in a coil of wire. The coil is connected in series with a switch and a resistor. The switch is open.

The magnet is displaced vertically and then released. The magnet oscillates with simple harmonic motion.

(i) State Faraday's law of electromagnetic induction.

.....

.....

.....

..... [2]

(ii) The switch is now closed. Explain why the oscillations of the magnet are damped.

.....

.....

.....

.....

.....

..... [3]

[Total: 10]

Kambridge Math & Physics
kambridgemp.com

4 (a) (i) Explain why ultrasound used in medical diagnosis is emitted in pulses.

.....

.....

..... [2]

(ii) Explain the principles of the **detection** of ultrasound waves used in medical diagnosis.

.....

.....

.....

.....

..... [3]

(b) The specific acoustic impedances Z of some media are given in Table 4.1.

Table 4.1

media	Z / kg m^{-2} s^{-1}
air	4.3×10^2
gel	1.5×10^6
soft tissue	1.6×10^6

(i) The specific acoustic impedances of two media are Z_1 and Z_2. The intensity reflection coefficient α for the boundary of these two media is given by:

$$\alpha = \frac{(Z_1 - Z_2)^2}{(Z_1 + Z_2)^2}.$$

Calculate, to three significant figures, the fraction of the ultrasound intensity that is reflected at a boundary between air and soft tissue.

α = ... [1]

Kambridge Math & Physics
kambridgemp.com

(ii) Use your value in **(b)(i)** to explain why gel is applied to the surface of the skin during an ultrasound scan.

.....

.....

.....

.....

.....

..... [2]

[Total: 8]

Kambridge Math & Physics
kambridgemp.com

5 **(a)** State **two** advantages of the transmission of data in digital form, rather than analogue form.

1. .....

.....

2. .....

.....

[2]

(b) Optic fibres are used for the transmission of data.

(i) A signal in an optic fibre is carried by an electromagnetic wave of frequency 1.36×10^{14} Hz. The speed of the wave in the fibre is $2.07 \times 10^{8}\,\text{m s}^{-1}$.

For this electromagnetic wave, determine the ratio:

$$\frac{\text{wavelength in free space}}{\text{wavelength in fibre}}.$$

Kambridge Math & Physics
kambridgemp.com

ratio = ... [2]

(ii) The attenuation per unit length of the signal in the fibre is $0.40\,\text{dB km}^{-1}$. The input power is 1.5 mW and the output power is 0.060 mW.

Calculate the length of the fibre.

length = ... km [3]

[Total: 7]

BLANK PAGE

Kambridge Math & Physics
kambridgemp.com

6 Two positively charged identical metal spheres A and B have their centres separated by a distance of 24 cm, as shown in Fig. 6.1.

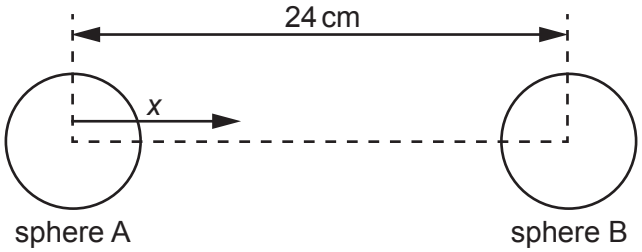

Fig. 6.1 (not to scale)

The variation with distance x from the centre of A of the electric field strength E due to the two spheres, along the line joining their centres, is represented in Fig. 6.2.

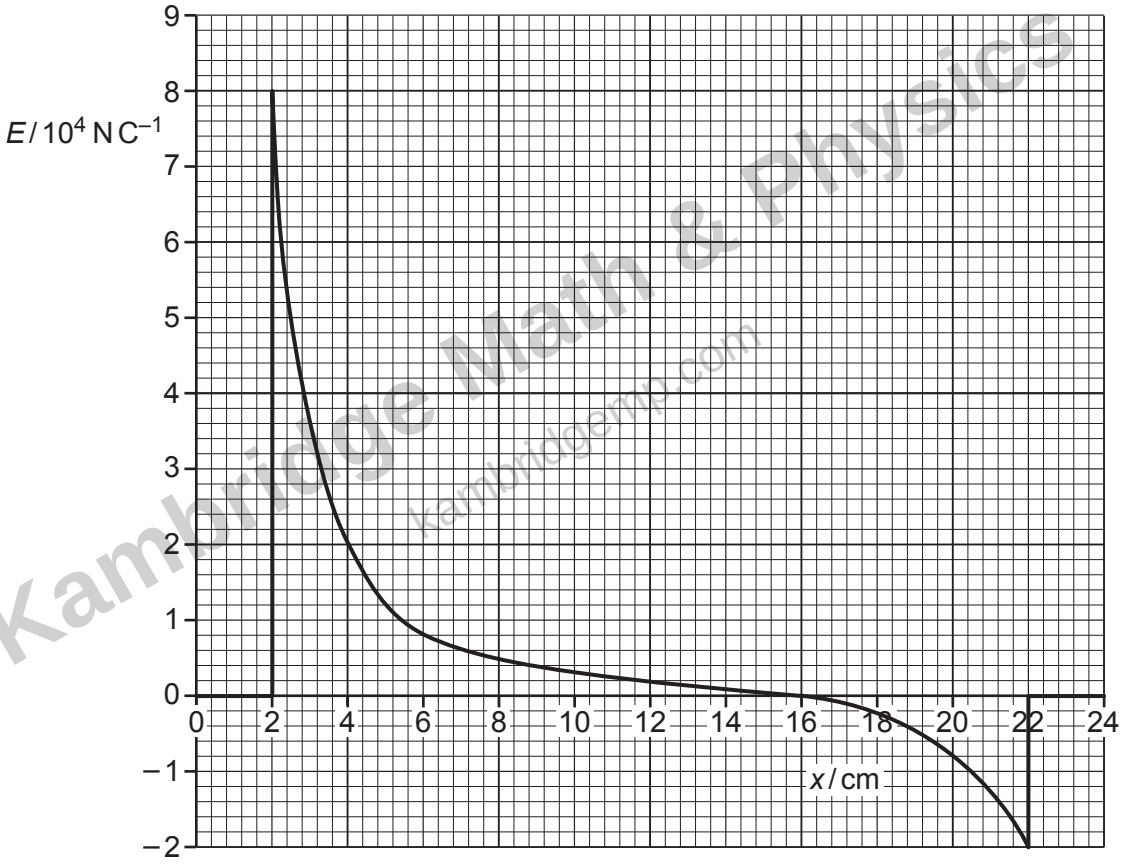

Kambridge Math & Physics
kambridgemp.com

Fig. 6.2

(a) State the radius of the two spheres.

radius = ... cm [1]

(b) The charge on sphere A is 3.6×10^{-9} C. Determine the charge Q_B on sphere B.

Assume that spheres A and B can be treated as point charges at their centres.

Explain your working.

Q_B = ... C [3]

(c) **(i)** Sphere B is removed.

Use information from **(b)** to determine the electric potential on the surface of sphere A.

Kambridge Math & Physics
kambridgemp.com

electric potential = ... V [2]

(ii) Calculate the capacitance of sphere A.

capacitance = ... F [2]

[Total: 8]

7 **(a)** On Fig. 7.1, sketch the temperature characteristic of a negative temperature coefficient (n.t.c.) thermistor. Label the axes with quantity and unit.



Fig. 7.1

[2]

(b) An n.t.c. thermistor and a resistor are connected as shown in Fig. 7.2.

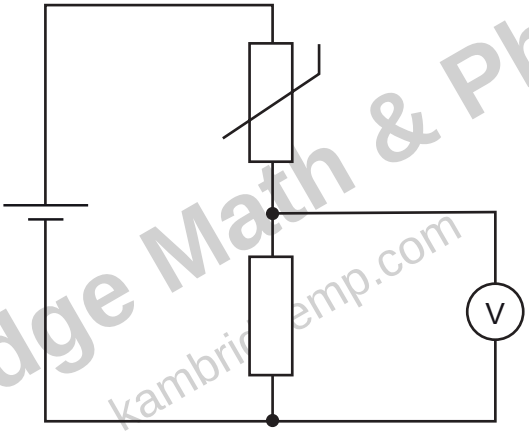

Fig. 7.2

The temperature of the thermistor is increased.

State and explain the change, if any, to the reading on the voltmeter.

.....

.....

..... [2]

Kambridge Math & Physics
kambridgemp.com

(c) The variation with the fractional change in length $\Delta x/x$ of the fractional change in resistance $\Delta R/R$ for a strain gauge is shown in Fig. 7.3.

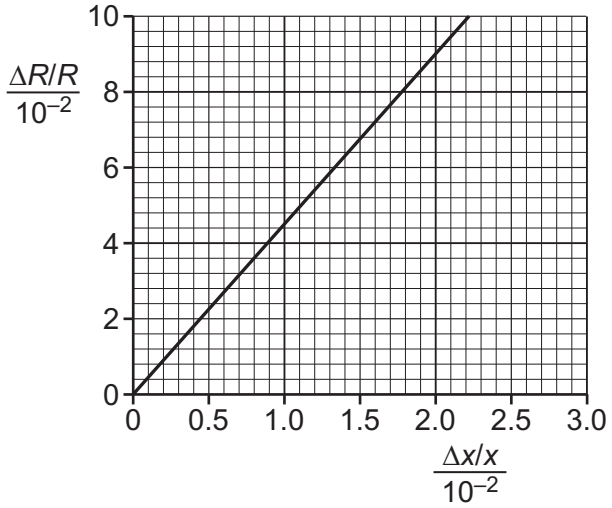

Fig. 7.3

The unstrained resistance of the gauge is 120 Ω. Calculate the new resistance of the gauge when it is extended to a strain of 0.020.

Kambridge Math & Physics
kambridgemp.com

resistance = ... Ω [3]

[Total: 7]

8 **(a)** Explain what is meant by a *magnetic field*.

.....

.....

.....

..... [1]

(b) The apparatus shown in Fig. 8.1 is used in an experiment to find the magnetic flux density *B* between the poles of a horseshoe magnet. Assume the magnetic field is uniform between the poles of the magnet and zero elsewhere.

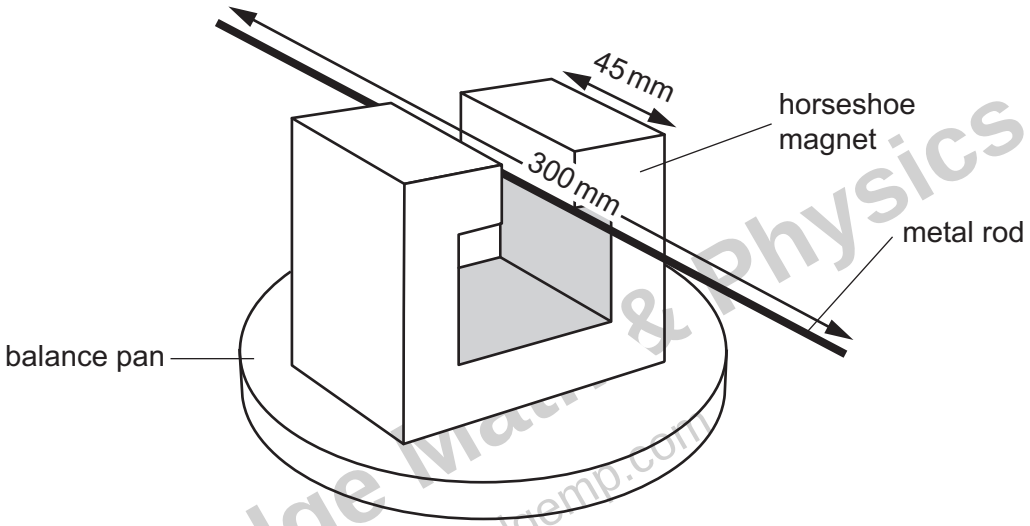

Fig. 8.1

Cambridge Maths & Physics
kambridgemp.com

The rigid metal rod of length 300 mm is fixed in position perpendicular to the direction of the magnetic field. The poles of the magnet are both 45 mm long. There is a current in the rod that causes a force on the rod. The balance is used to determine the magnitude of the force.

The variation with current *I* of the force *F* on the rod is shown in Fig. 8.2.

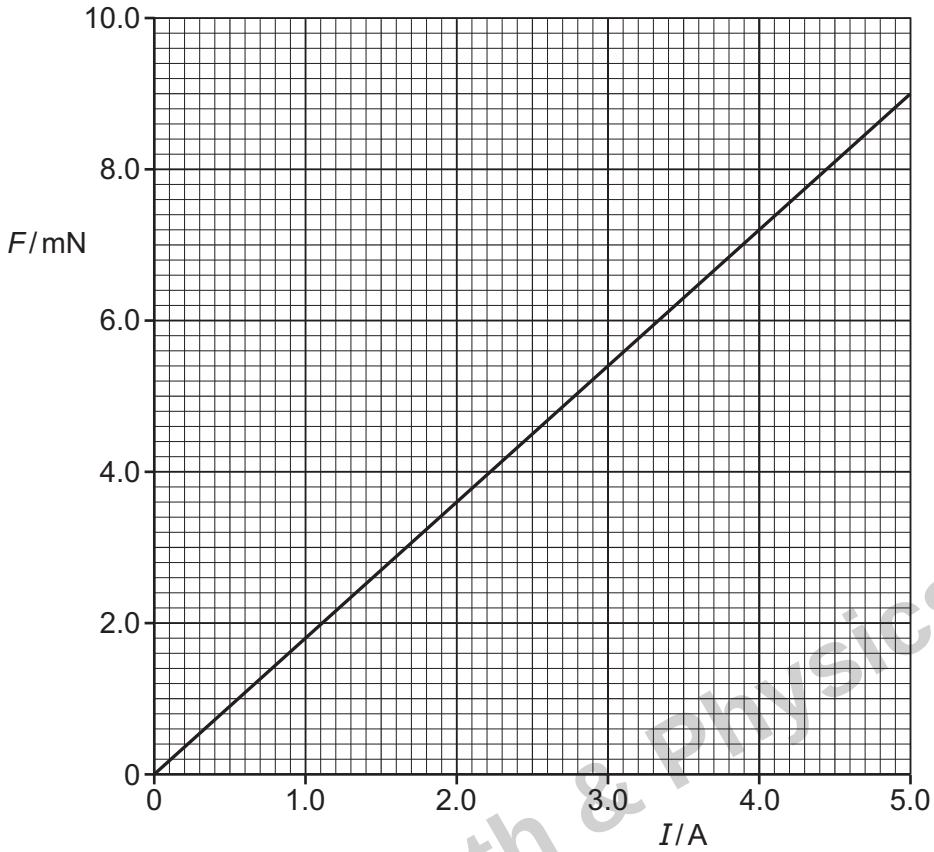

Fig. 8.2

Calculate the magnetic flux density *B*.

B = ... T [2]

Kambridge Math & Physics
kambridgemp.com

(c) In a different experiment, electrons are accelerated through a potential difference and then enter a region of magnetic field. The magnetic field is into the plane of the paper and is perpendicular to the direction of travel of the electrons, as illustrated in Fig. 8.3.

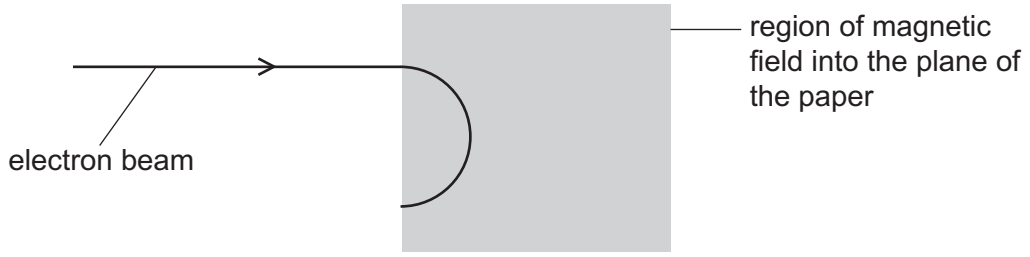

Fig. 8.3

(i) Explain why the electrons follow a circular path when inside the region of the magnetic field.

.....

.....

.....

..... [3]

(ii) State the measurements needed in order to determine the charge to mass ratio, e/m_e, of an electron.

.....

.....

..... [2]

[Total: 8]

Kambridge Math & Physics
kambridgemp.com

9 **(a)** The output of a power supply is represented by:

$$V = 9.0 \sin 20t$$

where V is the potential difference in volts and t is the time in seconds.

Determine, for the output of the supply:

(i) the root-mean-square (r.m.s.) voltage, $V_{r.m.s.}$

$V_{r.m.s}$ = ...V [1]

(ii) the period T.

T = ... s [2]

(b) The variations with time t of the output potential difference V from two different power supplies are shown in Fig. 9.1 and Fig. 9.2.

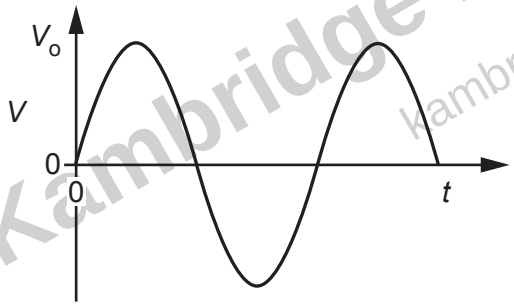

Fig. 9.1

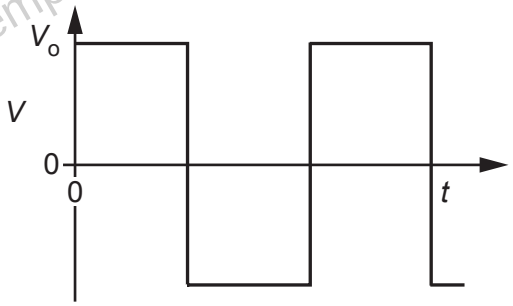

Fig. 9.2

The graphs are drawn to the same scale.

State and explain whether the same power would be dissipated in a 1.0 Ω resistor connected to each power supply.

.....

.....

..... [1]

Kambridge Math & Physics
kambridgemp.com

(c) (i) The power supply in **(a)** is connected to a transformer. The input power to the transformer is 80 W.

The secondary coil is connected to a resistor. The r.m.s. voltage across the resistor is 120 V. The r.m.s. current in the secondary coil is 0.64 A.

Calculate the efficiency of the transformer.

efficiency = ... [3]

(ii) State **one** reason why the transformer is not 100% efficient.

.....

..... [1]

[Total: 8]

Kambridge Math & Physics
kambridgemp.com

10 (a) By reference to the photoelectric effect, explain what is meant by *work function energy*.

.....

.....

..... [2]

(b) In an experiment, electromagnetic radiation of frequency f is incident on a metal surface.

The results in Fig. 10.1 show the variation with frequency f of the maximum kinetic energy E_{MAX} of electrons emitted from the surface.

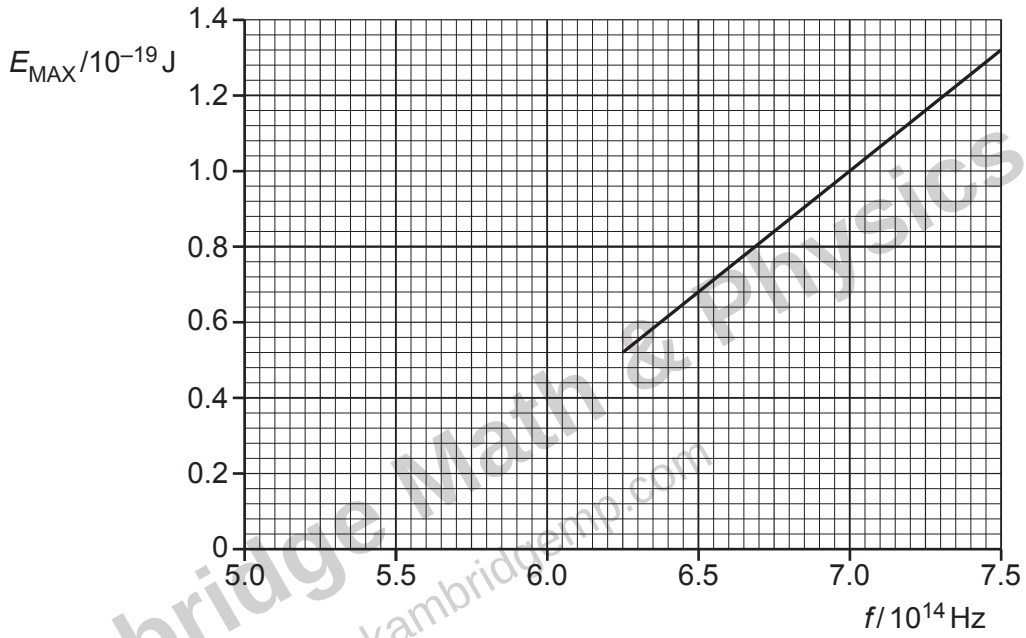

Fig. 10.1

Kambridge Math & Physics
kambridmp.com

(i) Determine the work function energy in J of the metal used in the experiment.

work function energy = ... J [2]

(ii) The work function energy in eV for some metals is given in Table 10.1.

Table 10.1

metal	work function / eV
tungsten	4.49
magnesium	3.68
potassium	2.26

Determine the metal used in the experiment. Show your working.

.....

..... [1]

(c) The intensity of the electromagnetic radiation for one particular frequency in **(b)** is increased.

State and explain the change, if any, in:

(i) the maximum kinetic energy of the emitted electrons

.....

..... [1]

(ii) the rate of emission of photoelectrons.

.....

..... [1]

[Total: 7]

Kambridge Math & Physics
kambridgemp.com

11 Electrons are accelerated through a potential difference of 100 kV. They are then incident on a metal target, they decelerate, and X-ray photons are emitted.

(a) Calculate the maximum possible frequency of the emitted X-ray photons.

frequency = ... Hz [2]

(b) Explain why an aluminium filter may be placed in the X-ray beam when producing an X-ray image of a patient.

.....

.....

.....

.....

.....

..... [3]

(c) The linear attenuation (absorption) coefficients μ for X-rays in bone, blood and muscle are given in Table 11.1.

Table 11.1

	μ / cm^{-1}
bone	3.0
blood	0.23
muscle	0.22

(i) A beam of these X-rays is incident on a person.

Calculate the percentage of the intensity of the X-ray beam that has been absorbed after passing through 0.80 cm of blood.

percentage of intensity absorbed = ... % [2]

Kambridge Math & Physics
kambridgemp.com

(ii) In an X-ray image, white regions show greater absorption of X-rays than dark regions.

State and explain the difference between the X-ray image of bone compared to that of muscle.

.....

.....

..... [2]

[Total: 9]

Kambridge Math & Physics
kambridgemp.com

12 **(a)** Explain what is meant by the *binding energy* of a nucleus.

.....

.....

..... [2]

(b) The following nuclear reaction takes place:

$$^{235}_{92}U + {}^{1}_{0}n \longrightarrow {}^{144}_{55}Cs + {}^{90}_{x}Rb + y\,{}^{1}_{0}n$$

(i) Determine the values of x and y.

x = ...

y = ... [1]

(ii) State the name of this type of nuclear reaction.

..... [1]

(iii) Compare the binding energy per nucleon of uranium-235 with the binding energy per nucleon of caesium-144.

.....

..... [1]

(c) Yttrium-90 decays into zirconium-90, a stable isotope.

A sample initially consists of pure yttrium-90.

Calculate the time, in days, when the ratio of the number of yttrium-90 nuclei to the number of zirconium-90 nuclei would be 2.0.

The half-life of yttrium-90 is 2.7 days.

time = ... days [3]

[Total: 8]

Kambridge Math & Physics
kambridgemp.com

BLANK PAGE

Kambridge Math & Physics
kambridgemp.com

Permission to reproduce items where third-party owned material protected by copyright is included has been sought and cleared where possible. Every reasonable effort has been made by the publisher (UCLES) to trace copyright holders, but if any items requiring clearance have unwittingly been included, the publisher will be pleased to make amends at the earliest possible opportunity.

To avoid the issue of disclosure of answer-related information to candidates, all copyright acknowledgements are reproduced online in the Cambridge Assessment International Education Copyright Acknowledgements Booklet. This is produced for each series of examinations and is freely available to download at www.cambridgeinternational.org after the live examination series.

Cambridge Assessment International Education is part of the Cambridge Assessment Group. Cambridge Assessment is the brand name of the University of Cambridge Local Examinations Syndicate (UCLES), which itself is a department of the University of Cambridge.