Cambridge Assessment International Education

Cambridge International AS & A Level

CANDIDATE NAME									
CENTRE NUMBER						CANDIDATE NUMBER				

3744677761

MATHEMATICS **9709/42**

Paper 4 Mechanics **May/June 2024**

1 hour 15 minutes

You must answer on the question paper.

You will need: List of formulae (MF19)

INSTRUCTIONS

- Answer **all** questions.
- Use a black or dark blue pen. You may use an HB pencil for any diagrams or graphs.
- Write your name, centre number and candidate number in the boxes at the top of the page.
- Write your answer to each question in the space provided.
- Do **not** use an erasable pen or correction fluid.
- Do **not** write on any bar codes.
- If additional space is needed, you should use the lined page at the end of this booklet; the question number or numbers must be clearly shown.
- You should use a calculator where appropriate.
- You must show all necessary working clearly; no marks will be given for unsupported answers from a calculator.
- Give non-exact numerical answers correct to 3 significant figures, or 1 decimal place for angles in degrees, unless a different level of accuracy is specified in the question.
- Where a numerical value for the acceleration due to gravity (g) is needed, use $10\,\text{m}\,\text{s}^{-2}$.

INFORMATION

- The total mark for this paper is 50.
- The number of marks for each question or part question is shown in brackets [ ].

Kambridge Math & Physics
kambridgemp.com

This document has **12** pages.

© UCLES 2024

1 A cyclist and bicycle have a total mass of 72 kg. The cyclist rides along a horizontal road against a total resistance force of 28 N.

Find the total work done by the cyclist to increase his speed from $8\,m\,s^{-1}$ to $16\,m\,s^{-1}$ while travelling a distance of 100 metres. [3]

Kambridge Math & Physics
kambridgemp.com

2 A particle P moves in a straight line. At time t s after leaving a point O on the line, P has velocity $v\,\text{m s}^{-1}$, where $v = 44t - 6t^2 - 36$.

(a) Find the set of values of t for which the acceleration of the particle is positive. [2]

(b) Find the two values of t at which P returns to O. [3]

Kambridge Math & Physics
kambridgemp.com

3

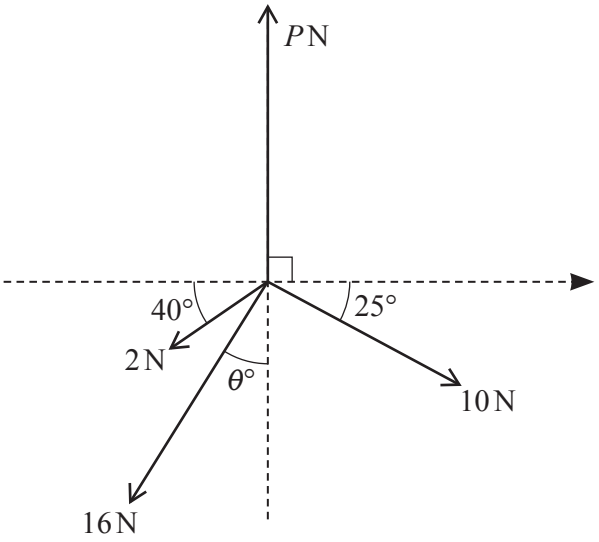

Four coplanar forces of magnitude PN, 10N, 16N and 2N act at a point in the directions shown in the diagram. It is given that the forces are in equilibrium.

Find the values of θ and P. [6]

Kambridge Math & Physics
kambridgemp.com

4 A car has mass 1400 kg. When the speed of the car is $v\,\text{m s}^{-1}$ the magnitude of the resistance to motion is $kv^2\,\text{N}$ where k is a constant.

(a) The car moves at a constant speed of $24\,\text{m s}^{-1}$ up a hill inclined at an angle of α to the horizontal where $\sin\alpha = 0.12$. At this speed the magnitude of the resistance to motion is 480 N.

(i) Find the value of k. [1]

.....

.....

.....

.....

(ii) Find the power of the car's engine. [3]

.....

.....

.....

.....

.....

.....

.....

.....

.....

(b) The car now moves at a constant speed on a straight level road.

Given that its engine is working at 54 kW, find this speed. [3]

.....

.....

.....

.....

.....

.....

.....

.....

Kambridge Math & Physics
kambridgemp.com

5

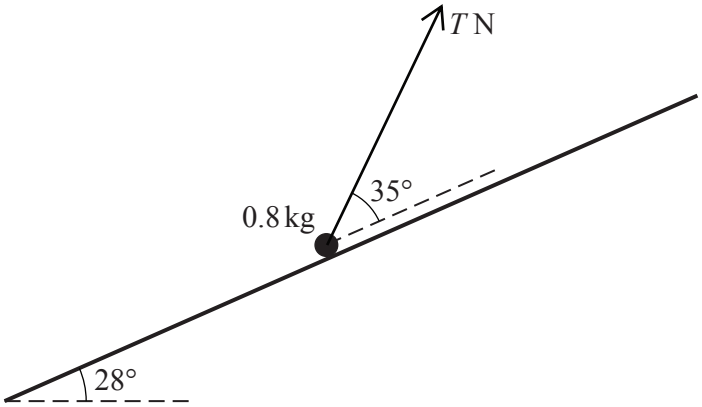

A particle of mass 0.8 kg lies on a rough plane which is inclined at an angle of 28° to the horizontal. The particle is kept in equilibrium by a force of magnitude T N. This force acts at an angle of 35° above a line of greatest slope of the plane (see diagram). The coefficient of friction between the particle and the plane is 0.2 .

Find the least and greatest possible values of T. [8]

Kambridge Math & Physics
kambridgemp.com

Kambridge Math & Physics
kambridgemp.com

6 Three particles A, B and C of masses 5 kg, 1 kg and 2 kg respectively lie at rest in that order on a straight smooth horizontal track XYZ. Initially A is at X, B is at Y and C is at Z. Particle A is projected towards B with a speed of $6\,\text{m s}^{-1}$ and at the same instant C is projected towards B with a speed of $v\,\text{m s}^{-1}$. In the subsequent motion, A collides and coalesces with B to form particle D. Particle D then collides and coalesces with C to form particle E and E moves towards Z.

(a) Show that after the second collision the speed of E is $\frac{15-v}{4}\,\text{m s}^{-1}$. [3]

.....

.....

.....

.....

.....

.....

.....

.....

.....

.....

.....

(b) The total loss of kinetic energy of the system due to the two collisions is 63 J.

Use the result from **(a)** to show that $v = 3$. [3]

.....

.....

.....

.....

.....

.....

.....

.....

.....

.....

.....

Kambridge Math & Physics
kambridgemp.com

.....

.....

.....

.....

.....

.....

.....

.....

(c) It is given that the distance XY is 36 m and the distance YZ is 98 m.

(i) Find the time between the two collisions. [4]

.....

.....

.....

.....

.....

.....

.....

.....

.....

.....

.....

(ii) Find the time between the instant that A is projected from X and the instant that E reaches Z. [1]

.....

.....

.....

.....

.....

Kambridge Math & Physics
kambridgemp.com

7

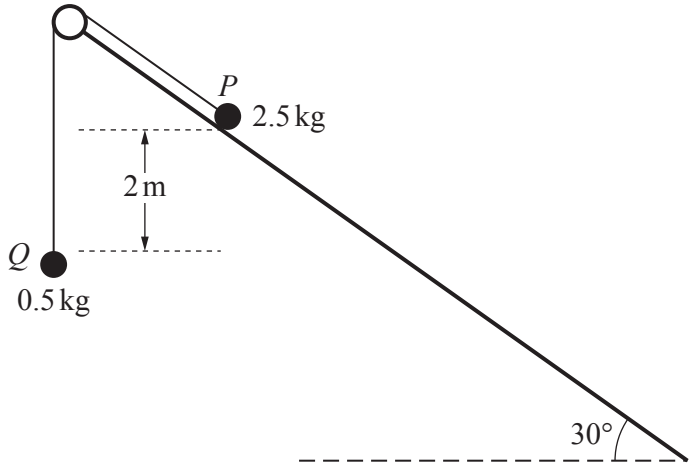

Two particles P and Q of masses 2.5 kg and 0.5 kg respectively are connected by a light inextensible string that passes over a small smooth pulley fixed at the top of a plane inclined at an angle of 30° to the horizontal. Particle P is on the plane and Q hangs below the pulley such that the level of Q is 2 m below the level of P (see diagram).

Particle P is released from rest with the string taut and slides down the plane. The plane is rough with coefficient of friction 0.2 between the plane and P.

(a) Find the acceleration of P. [5]

Kambridge Math & Physics
kambridgemp.com

(b) Use an energy method to find the speed of the particles at the instant when they are at the same vertical height. [5]

Kambridge Math & Physics
kambridgemp.com

Additional page

If you use the following page to complete the answer to any question, the question number must be clearly shown.

Kambridge Math & Physics
kambridgemp.com

Permission to reproduce items where third-party owned material protected by copyright is included has been sought and cleared where possible. Every reasonable effort has been made by the publisher (UCLES) to trace copyright holders, but if any items requiring clearance have unwittingly been included, the publisher will be pleased to make amends at the earliest possible opportunity.

To avoid the issue of disclosure of answer-related information to candidates, all copyright acknowledgements are reproduced online in the Cambridge Assessment International Education Copyright Acknowledgements Booklet. This is produced for each series of examinations and is freely available to download at www.cambridgeinternational.org after the live examination series.

Cambridge Assessment International Education is part of Cambridge Assessment. Cambridge Assessment is the brand name of the University of Cambridge Local Examinations Syndicate (UCLES), which is a department of the University of Cambridge.

© UCLES 2024