Cambridge Assessment International Education

Cambridge International AS & A Level

CANDIDATE NAME

CENTRE NUMBER

CANDIDATE NUMBER

3051543943

MATHEMATICS **9709/43**

Paper 4 Mechanics **October/November 2025**

1 hour 15 minutes

You must answer on the question paper.

You will need: List of formulae (MF19)

Kambridge Math & Physics
kambridgemp.com

INSTRUCTIONS

- Answer **all** questions.
- Use a black or dark blue pen. You may use an HB pencil for any diagrams or graphs.
- Write your name, centre number and candidate number in the boxes at the top of the page.
- Write your answer to each question in the space provided.
- Do **not** use an erasable pen or correction fluid.
- Do **not** write on any bar codes.
- If additional space is needed, you should use the lined page at the end of this booklet; the question number or numbers must be clearly shown.
- You should use a calculator where appropriate.
- You must show all necessary working clearly; no marks will be given for unsupported answers from a calculator.
- Give non-exact numerical answers correct to 3 significant figures, or 1 decimal place for angles in degrees, unless a different level of accuracy is specified in the question.
- Where a numerical value for the acceleration due to gravity (g) is needed, use $10\,\text{m}\,\text{s}^{-2}$.

INFORMATION

- The total mark for this paper is 50.
- The number of marks for each question or part question is shown in brackets [ ].

This document has **16** pages. Any blank pages are indicated.

© UCLES 2025

[Turn over

BLANK PAGE

Kambridge Math & Physics
kambridgemp.com

DO NOT WRITE IN THIS MARGIN
DO NOT WRITE IN THIS MARGIN
DO NOT WRITE IN THIS MARGIN
DO NOT WRITE IN THIS MARGIN
DO NOT WRITE IN THIS MARGIN

1

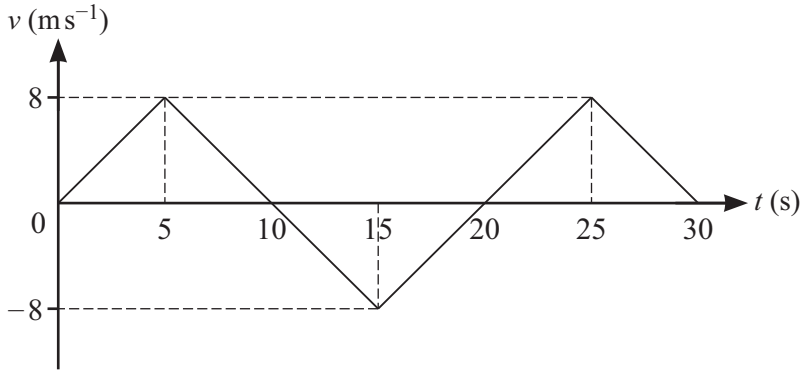

The diagram shows the velocity-time graph for the motion of an athlete. The athlete runs in a straight line from point *A* to point *B*, runs back to point *A* and finishes at point *B*. The graph consists of four straight line segments.

(a) Find the deceleration of the athlete 7 seconds after leaving *A*. [1]

.....

.....

.....

.....

.....

(b) Find the total distance travelled by the athlete. [2]

.....

.....

.....

.....

.....

.....

.....

.....

.....

.....

.....

.....

.....

Kambridge Math & Physics
kambridgemp.com

DO NOT WRITE IN THIS MARGIN
DO NOT WRITE IN THIS MARGIN
DO NOT WRITE IN THIS MARGIN
DO NOT WRITE IN THIS MARGIN
DO NOT WRITE IN THIS MARGIN

2 The engine of a motorcycle can generate a maximum power of 105 kW. The mass of the motorcycle and its rider is 400 kg. The total resistance to the motion of the motorcycle and its rider is cv N, where v m s^{-1} is the motorcyclist's speed and c is a constant.

The motorcyclist travels along a straight horizontal road under maximum engine power. When the motorcyclist's speed is 35 m s^{-1}, his acceleration is 0.5 m s^{-2}.

(a) Show that $c = 80$. [3]

.....

.....

.....

.....

.....

.....

.....

.....

.....

.....

The motorcyclist now travels up a straight hill under maximum engine power. The hill makes an angle of $\sin^{-1}\left(\frac{3}{20}\right)$ with the horizontal.

(b) Find the steady speed at which the motorcyclist travels up the hill. [3]

.....

.....

.....

.....

.....

.....

.....

.....

.....

.....

Kambridge Math & Physics
kambridgemp.com

DO NOT WRITE IN THIS MARGIN

DO NOT WRITE IN THIS MARGIN
DO NOT WRITE IN THIS MARGIN
DO NOT WRITE IN THIS MARGIN
DO NOT WRITE IN THIS MARGIN
DO NOT WRITE IN THIS MARGIN

3 A block of mass 4 kg is pulled along a rough horizontal road by a constant force of magnitude 25 N acting at an angle of 36° above the horizontal. The block moves in a straight line passing through two points A and B on the road, where $AB = 120\,\text{m}$. The coefficient of friction between the block and the road is 0.4.

(a) Find the work done against friction in moving the block from A to B. [3]

.....

.....

.....

.....

.....

.....

.....

.....

The speed of the block at A is $7\,\text{m s}^{-1}$.

(b) Use an energy method to find the speed of the block at B. [4]

.....

.....

.....

.....

.....

.....

.....

.....

.....

.....

.....

.....

.....

.....

.....

Kambridge Math & Physics
kambridgemp.com

4 A particle P moves in a straight line. At time ts after passing through a point O on the line, the displacement of P from O is sm, where $s = 0.01t^3 - 0.3t^2 - 2.07t$.

(a) Find the value of s when P has its minimum velocity, and find also the speed of P at this instant. [6]

Kambridge Math & Physics
kambridgemp.com

DO NOT WRITE IN THIS MARGIN
DO NOT WRITE IN THIS MARGIN
DO NOT WRITE IN THIS MARGIN
DO NOT WRITE IN THIS MARGIN
DO NOT WRITE IN THIS MARGIN

(b) Find the acceleration of P at the instant when the direction of motion of P changes. [4]

DO NOT WRITE IN THIS MARGIN
DO NOT WRITE IN THIS MARGIN
DO NOT WRITE IN THIS MARGIN
DO NOT WRITE IN THIS MARGIN
DO NOT WRITE IN THIS MARGIN

Kambridge Math & Physics
kambridgemp.com

5

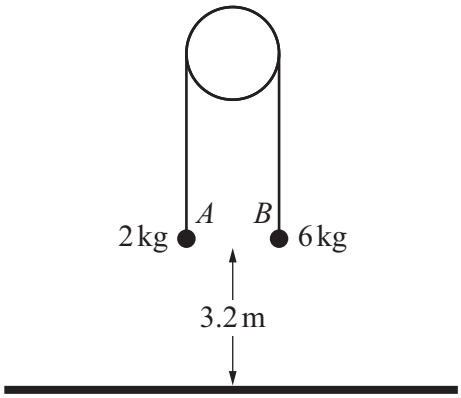

Particles A and B, of masses 2 kg and 6 kg respectively, are attached to the ends of a light inextensible string. The string passes over a smooth fixed pulley and the particles hang vertically below the pulley. Both particles are initially held at rest at a height of 3.2 m above horizontal ground (see diagram). Particle A is projected vertically **downwards** with a speed of $1.2\,\text{m s}^{-1}$.

(a) Find the tension in the string and the magnitude of the acceleration of the particles. [4]

Kambridge Math & Physics
kambridgemp.com

DO NOT WRITE IN THIS MARGIN

In the subsequent motion, A does **not** hit the ground and neither particle reaches the pulley. When B hits the ground, it does **not** rebound.

(b) Find the time that B is in motion. [2]

.....

.....

.....

.....

.....

.....

.....

(c) Find the distance between the lowest and highest points that A reaches. [4]

.....

.....

.....

.....

.....

.....

.....

.....

.....

.....

.....

.....

.....

.....

.....

.....

.....

Kambridge Math & Physics
kambridgemp.com

DO NOT WRITE IN THIS MARGIN
DO NOT WRITE IN THIS MARGIN
DO NOT WRITE IN THIS MARGIN
DO NOT WRITE IN THIS MARGIN
DO NOT WRITE IN THIS MARGIN

6 Particle P of mass m kg and particle Q of mass 2 kg are free to move on a smooth horizontal plane. P and Q are moving directly towards each other with speeds $u\,\text{m s}^{-1}$ and $3u\,\text{m s}^{-1}$ respectively. P and Q collide and the direction of motion of each particle is reversed by the collision. Immediately after the collision the speed of P is $\frac{u}{3}\,\text{m s}^{-1}$.

(a) Find, in terms of m and u, an expression for the velocity of Q after the collision and hence show that $m > 4.5$. [3]

Kambridge Math & Physics
kambridgemp.com

DO NOT WRITE IN THIS MARGIN

Q subsequently hits a vertical wall which is perpendicular to the direction of motion of Q. The speed of Q after the impact with the wall is a quarter of its speed before the impact with the wall. There are no further collisions between P and Q.

(b) Given that m is an integer, determine the largest possible value of m. [4]

Kambridge Math & Physics
kambridgemp.com

DO NOT WRITE IN THIS MARGIN
DO NOT WRITE IN THIS MARGIN
DO NOT WRITE IN THIS MARGIN
DO NOT WRITE IN THIS MARGIN
DO NOT WRITE IN THIS MARGIN

7

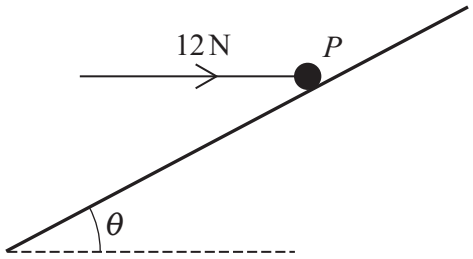

A particle P of mass 6 kg lies on a rough plane inclined at an acute angle θ to the horizontal. A horizontal force of magnitude 12 N acts on P as shown in the diagram. The line of action of this horizontal force lies in a vertical plane which contains the line of greatest slope of the plane that passes through P. The coefficient of friction between P and the plane is μ.

P is in equilibrium and on the point of sliding down the plane.

(a) Show that $\mu = \dfrac{5\tan\theta - 1}{5 + \tan\theta}$. [5]

.....

.....

.....

.....

.....

.....

.....

.....

.....

.....

.....

.....

(b) Hence find the set of possible values of θ. [2]

.....

.....

.....

.....

.....

.....

Kambridge Math & Physics
kambridgemp.com

DO NOT WRITE IN THIS MARGIN

Additional page

If you use the following page to complete the answer to any question, the question number must be clearly shown.

DO NOT WRITE IN THIS MARGIN
DO NOT WRITE IN THIS MARGIN
DO NOT WRITE IN THIS MARGIN
DO NOT WRITE IN THIS MARGIN
DO NOT WRITE IN THIS MARGIN

Kambridge Math & Physics
kambridgemp.com

BLANK PAGE

Kambridge Math & Physics
kambridgemp.com

DO NOT WRITE IN THIS MARGIN
DO NOT WRITE IN THIS MARGIN
DO NOT WRITE IN THIS MARGIN
DO NOT WRITE IN THIS MARGIN
DO NOT WRITE IN THIS MARGIN

BLANK PAGE

DO NOT WRITE IN THIS MARGIN
DO NOT WRITE IN THIS MARGIN
DO NOT WRITE IN THIS MARGIN
DO NOT WRITE IN THIS MARGIN
DO NOT WRITE IN THIS MARGIN

Kambridge Math & Physics
kambridgemp.com

BLANK PAGE

Kambridge Math & Physics
kambridgemp.com

DO NOT WRITE IN THIS MARGIN
DO NOT WRITE IN THIS MARGIN
DO NOT WRITE IN THIS MARGIN
DO NOT WRITE IN THIS MARGIN
DO NOT WRITE IN THIS MARGIN

Permission to reproduce items where third-party owned material protected by copyright is included has been sought and cleared where possible. Every reasonable effort has been made by the publisher (UCLES) to trace copyright holders, but if any items requiring clearance have unwittingly been included, the publisher will be pleased to make amends at the earliest possible opportunity.

To avoid the issue of disclosure of answer-related information to candidates, all copyright acknowledgements are reproduced online in the Cambridge Assessment International Education Copyright Acknowledgements Booklet. This is produced for each series of examinations and is freely available to download at www.cambridgeinternational.org after the live examination series.

Cambridge Assessment International Education is part of Cambridge Assessment. Cambridge Assessment is the brand name of the University of Cambridge Local Examinations Syndicate (UCLES), which is a department of the University of Cambridge.