* 0000800000001 *

Cambridge Assessment International Education

Cambridge International AS & A Level

CANDIDATE NAME

CENTRE NUMBER

CANDIDATE NUMBER

* 1 4 5 7 3 4 3 3 2 4 *

MATHEMATICS **9709/41**

Paper 4 Mechanics **October/November 2024**

1 hour 15 minutes

You must answer on the question paper.

You will need: List of formulae (MF19)

INSTRUCTIONS

- Answer **all** questions.
- Use a black or dark blue pen. You may use an HB pencil for any diagrams or graphs.
- Write your name, centre number and candidate number in the boxes at the top of the page.
- Write your answer to each question in the space provided.
- Do **not** use an erasable pen or correction fluid.
- Do **not** write on any bar codes.
- If additional space is needed, you should use the lined page at the end of this booklet; the question number or numbers must be clearly shown.
- You should use a calculator where appropriate.
- You must show all necessary working clearly; no marks will be given for unsupported answers from a calculator.
- Give non-exact numerical answers correct to 3 significant figures, or 1 decimal place for angles in degrees, unless a different level of accuracy is specified in the question.
- Where a numerical value for the acceleration due to gravity (g) is needed, use $10\,\text{m}\,\text{s}^{-2}$.

INFORMATION

- The total mark for this paper is 50.
- The number of marks for each question or part question is shown in brackets [ ].

Kambridge Math & Physics
kambridgemp.com

This document has **16** pages. Any blank pages are indicated.

© UCLES 2024

1 Two particles, of masses 1.8 kg and 1.2 kg, are connected by a light inextensible string that passes over a fixed smooth pulley. The particles hang vertically. The system is released from rest.

Find the magnitude of the acceleration of the particles and find the tension in the string. [4]

Kambridge Math & Physics
kambridgemp.com

DO NOT WRITE IN THIS MARGIN
DO NOT WRITE IN THIS MARGIN
DO NOT WRITE IN THIS MARGIN
DO NOT WRITE IN THIS MARGIN
DO NOT WRITE IN THIS MARGIN

2

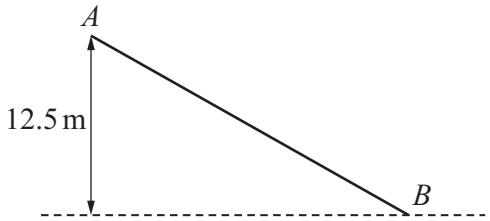

A particle of mass 7.5 kg, starting from rest at A, slides down an inclined plane AB. The point B is 12.5 metres vertically below the level of A, as shown in the diagram.

(a) Given that the plane is smooth, use an energy method to find the speed of the particle at B. [2]

.....

.....

.....

.....

.....

.....

(b) It is given instead that the plane is rough and the particle reaches B with a speed of $8\,\text{m}\,\text{s}^{-1}$. The plane is 25 m long and the constant frictional force has magnitude F N.

Find the value of F. [3]

.....

.....

.....

.....

.....

.....

.....

.....

.....

.....

.....

.....

.....

Kambridge Math & Physics
kambridgemp.com

DO NOT WRITE IN THIS MARGIN
DO NOT WRITE IN THIS MARGIN
DO NOT WRITE IN THIS MARGIN
DO NOT WRITE IN THIS MARGIN
DO NOT WRITE IN THIS MARGIN

3

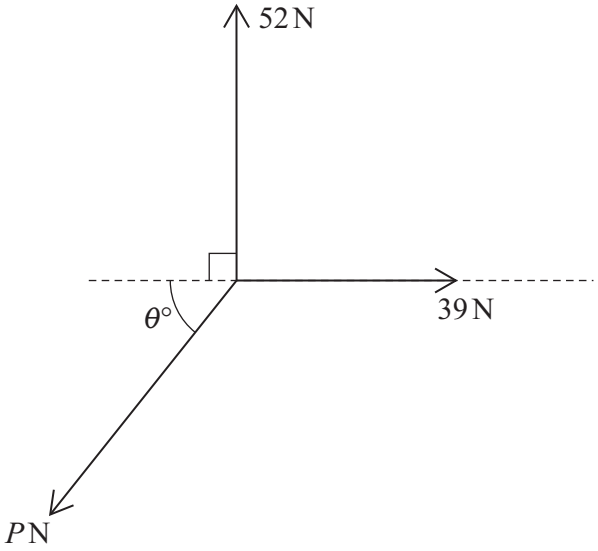

Coplanar forces of magnitudes 52 N, 39 N and P N act at a point in the directions shown in the diagram. The system is in equilibrium.

Find the values of P and θ. [4]

Kambridge Math & Physics
kambridgemp.com

DO NOT WRITE IN THIS MARGIN

4 A bus travels between two stops, A and B. The bus starts from rest at A and accelerates at a constant rate of $a\,\text{m s}^{-2}$ until it reaches a speed of $16\,\text{m s}^{-1}$. It then travels at this constant speed before decelerating at a constant rate of $0.75a\,\text{m s}^{-2}$, coming to rest at B. The total time for the journey is 240 s.

(a) Sketch the velocity-time graph for the bus's journey from A to B. [1]



(b) Find an expression, in terms of a, for the length of time that the bus is travelling with constant speed. [2]

.....

.....

.....

.....

.....

.....

(c) Given that the distance from A to B is 3000 m, find the value of a. [3]

.....

.....

.....

.....

.....

.....

.....

.....

.....

.....

.....

Kambridge Math & Physics
kambridgemp.com

DO NOT WRITE IN THIS MARGIN
DO NOT WRITE IN THIS MARGIN
DO NOT WRITE IN THIS MARGIN
DO NOT WRITE IN THIS MARGIN
DO NOT WRITE IN THIS MARGIN

5 A particle, A, is projected vertically upwards from a point O with a speed of $80\,\text{m}\,\text{s}^{-1}$. One second later a second particle, B, with the same mass as A, is projected vertically upwards from O with a speed of $100\,\text{m}\,\text{s}^{-1}$. At time T s after the first particle is projected, the two particles collide and coalesce to form a particle C.

(a) Show that $T = 3.5$. [4]

(b) Find the height above O at which the particles collide. [1]

Kambridge Math & Physics
kambridgemp.com

DO NOT WRITE IN THIS MARGIN

(c) Find the time from A being projected until C returns to O. [5]

DO NOT WRITE IN THIS MARGIN
DO NOT WRITE IN THIS MARGIN
DO NOT WRITE IN THIS MARGIN
DO NOT WRITE IN THIS MARGIN
DO NOT WRITE IN THIS MARGIN

Kambridge Math & Physics
kambridgemp.com

6

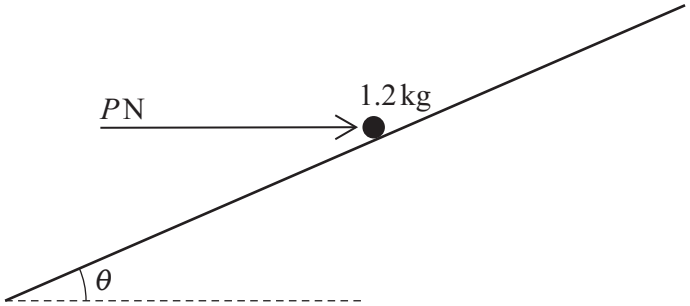

A particle of mass 1.2 kg is placed on a rough plane which is inclined at an angle θ to the horizontal, where $\sin\theta = \frac{7}{25}$. The particle is kept in equilibrium by a horizontal force of magnitude P N acting in a vertical plane containing a line of greatest slope (see diagram). The coefficient of friction between the particle and the plane is 0.15 .

Find the least possible value of P. [6]

Kambridge Math & Physics
kambridgemp.com

DO NOT WRITE IN THIS MARGIN

DO NOT WRITE IN THIS MARGIN
DO NOT WRITE IN THIS MARGIN
DO NOT WRITE IN THIS MARGIN
DO NOT WRITE IN THIS MARGIN
DO NOT WRITE IN THIS MARGIN

Kambridge Math & Physics
kambridgemp.com

7 A car has mass 1200 kg. When the car is travelling at a speed of v m s^{-1}, there is a resistive force of magnitude kv N. The maximum power of the car's engine is 92.16 kW.

(a) The car travels along a straight level road.

(i) The car has a greatest possible constant speed of 48 m s^{-1}.

Show that $k = 40$. [1]

.....

.....

.....

.....

.....

.....

.....

.....

.....

.....

.....

(ii) At an instant when its speed is 45 m s^{-1}, find the greatest possible acceleration of the car. [3]

.....

.....

.....

.....

.....

.....

.....

.....

.....

.....

.....

Kambridge Math & Physics
kambridgemp.com

DO NOT WRITE IN THIS MARGIN
DO NOT WRITE IN THIS MARGIN
DO NOT WRITE IN THIS MARGIN
DO NOT WRITE IN THIS MARGIN
DO NOT WRITE IN THIS MARGIN

(b) The car now travels at a constant speed up a hill inclined at an angle of $\sin^{-1}0.15$ to the horizontal.

Find the greatest possible speed of the car going up the hill. [4]

DO NOT WRITE IN THIS MARGIN
DO NOT WRITE IN THIS MARGIN
DO NOT WRITE IN THIS MARGIN
DO NOT WRITE IN THIS MARGIN
DO NOT WRITE IN THIS MARGIN

Kambridge Math & Physics
kambridgemp.com

8 A particle P moves in a straight line, passing through a point O with velocity $4.2\,\text{m}\,\text{s}^{-1}$. At time t s after P passes O, the acceleration, $a\,\text{m}\,\text{s}^{-2}$, of P is given by $a = 0.6t - 2.7$.

Find the distance P travels between the times at which it is at instantaneous rest. [7]

Kambridge Math & Physics
kambridgemp.com

DO NOT WRITE IN THIS MARGIN
DO NOT WRITE IN THIS MARGIN
DO NOT WRITE IN THIS MARGIN
DO NOT WRITE IN THIS MARGIN
DO NOT WRITE IN THIS MARGIN

DO NOT WRITE IN THIS MARGIN
DO NOT WRITE IN THIS MARGIN
DO NOT WRITE IN THIS MARGIN
DO NOT WRITE IN THIS MARGIN
DO NOT WRITE IN THIS MARGIN

Kambridge Math & Physics
kambridgemp.com

Additional page

If you use the following page to complete the answer to any question, the question number must be clearly shown.

Kambridge Math & Physics
kambridgemp.com

DO NOT WRITE IN THIS MARGIN
DO NOT WRITE IN THIS MARGIN
DO NOT WRITE IN THIS MARGIN
DO NOT WRITE IN THIS MARGIN
DO NOT WRITE IN THIS MARGIN

BLANK PAGE

DO NOT WRITE IN THIS MARGIN
DO NOT WRITE IN THIS MARGIN
DO NOT WRITE IN THIS MARGIN
DO NOT WRITE IN THIS MARGIN
DO NOT WRITE IN THIS MARGIN

Kambridge Math & Physics
kambridgemp.com

BLANK PAGE

Kambridge Math & Physics
kambridgemp.com

DO NOT WRITE IN THIS MARGIN
DO NOT WRITE IN THIS MARGIN
DO NOT WRITE IN THIS MARGIN
DO NOT WRITE IN THIS MARGIN
DO NOT WRITE IN THIS MARGIN

Permission to reproduce items where third-party owned material protected by copyright is included has been sought and cleared where possible. Every reasonable effort has been made by the publisher (UCLES) to trace copyright holders, but if any items requiring clearance have unwittingly been included, the publisher will be pleased to make amends at the earliest possible opportunity.

To avoid the issue of disclosure of answer-related information to candidates, all copyright acknowledgements are reproduced online in the Cambridge Assessment International Education Copyright Acknowledgements Booklet. This is produced for each series of examinations and is freely available to download at www.cambridgeinternational.org after the live examination series.

Cambridge Assessment International Education is part of Cambridge Assessment. Cambridge Assessment is the brand name of the University of Cambridge Local Examinations Syndicate (UCLES), which is a department of the University of Cambridge.